File No.	182	SHEET	1/1

1 SPECIFICATION
Current:3A
Operation Temperature:−55°C~+105°C
Contact Resistance:20 Milliohms Max.
Insulation Resistance:1000 Megaohms Min.
Withstanding Voltage:1000V AC RMS
Housing:PBT(UL94V−0),Black
Contact:Copper Alloy,Gold Flash
RoHS Compliant

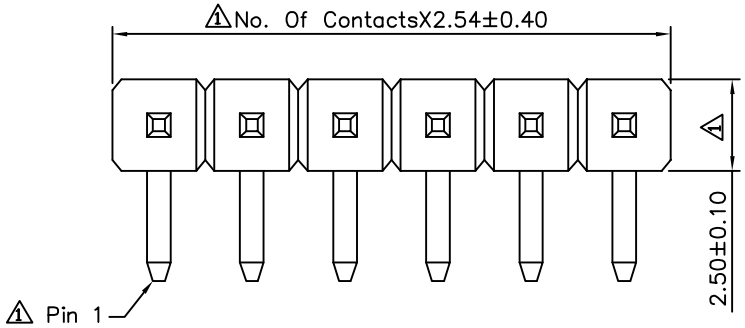

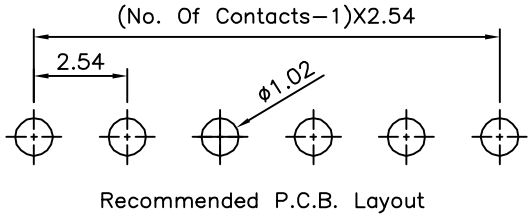

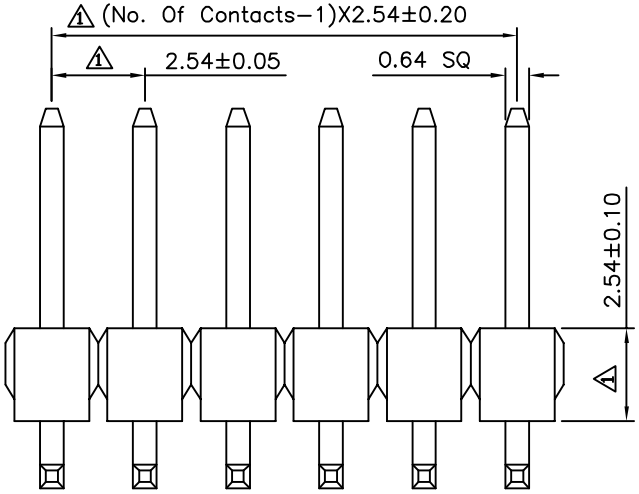

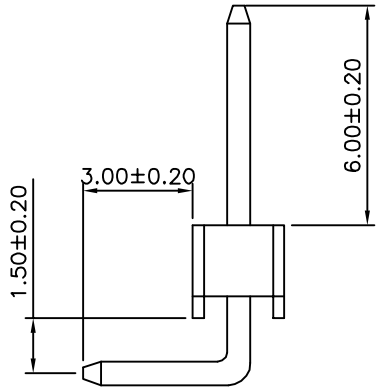

4UCON 元化興業股份有限公司 4UCON TECHNOLOGY INC.

DRAWING No.	APPROVED BY MEI	UNLESS OTHERWISE SPECIFIED TOLERANCES ARE
00873	CHECKED BY HZF	.X ±0.38
	DRAWING BY QQJ	.XX ±0.25
SCALE NONE	REV. A1	ANG. ±5°
		UNIT mm

NO.	REV.	REVISIONS	CHK	DATE
1	A1	Modify Data	HZF	06/22/2010
0	A0	NEW RELEASE	SHIN	03/06/2006