File No.	387	SHEET 1 / 1

SPECIFICATIONS

Current Rating:5 Amp
Dielectric Withstanding Voltage:1000V AC For 1 Minute
Insulation Resistance:1000 Megohms Min. At 500V DC
Contact Resistance:15 Milliohms Max.
Operating Temperature:−55°C~+105°C
Insulator:PBT+30% Glass Fiber
UL 94V−0,Black
Contact:Copper Alloy,Gold Flash
Shell:Steel,Nickel Plated
Boardlock:Brass,Tin Plated

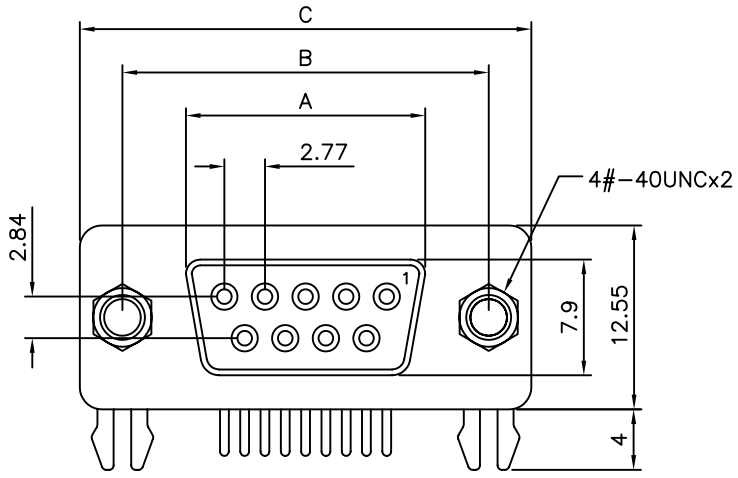

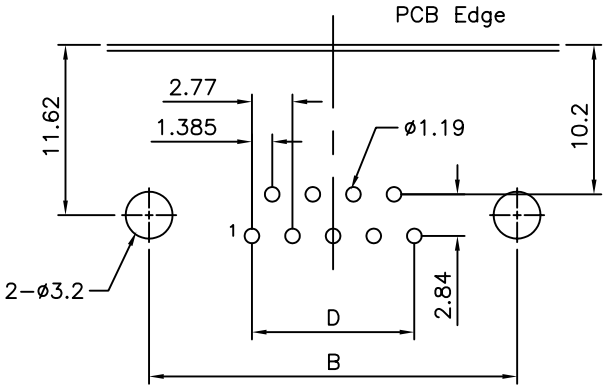

PCB Layout

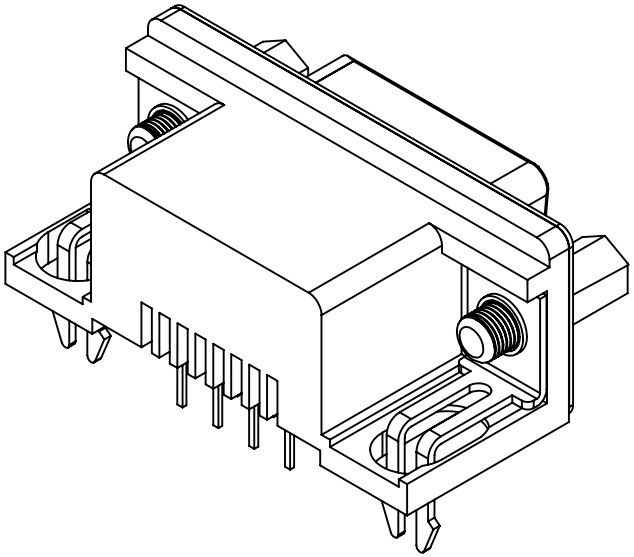

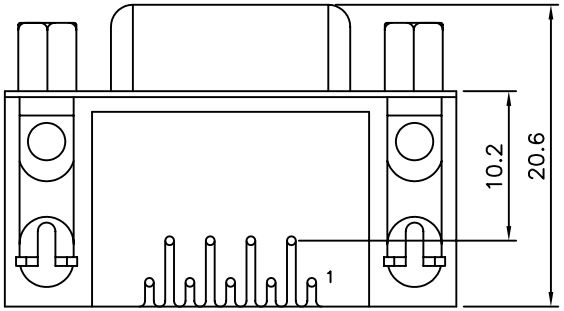

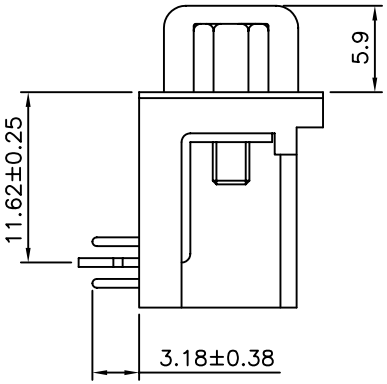

Pin	A±0.25	B±0.25	C±0.38	D
09	16.33	24.99	30.80	11.08
15	24.66	33.32	39.10	19.39
25	38.38	47.04	53.00	33.24
37	54.84	63.50	69.32	49.86

4UCON 元化興業股份有限公司
4UCON TECHNOLOGY INC.

DRAWING No.	APPROVED BY	MEI	UNLESS OTHERWISE SPECIFIED TOLERANCES ARE
03114	CHECKED BY	BECKY	.X ±0.25
	DRAWING BY	HZF	.XX ±0.15
			.XXX ±0.05
			ANG. ±1°
SCALE NONE	REV.	B0	UNIT mm

NO.	REV.	REVISIONS	CHK	DATE
0	B0	NEW RELEASE	BECKY	09/09/2005