File No.	353GF29217	SHEET	1/1

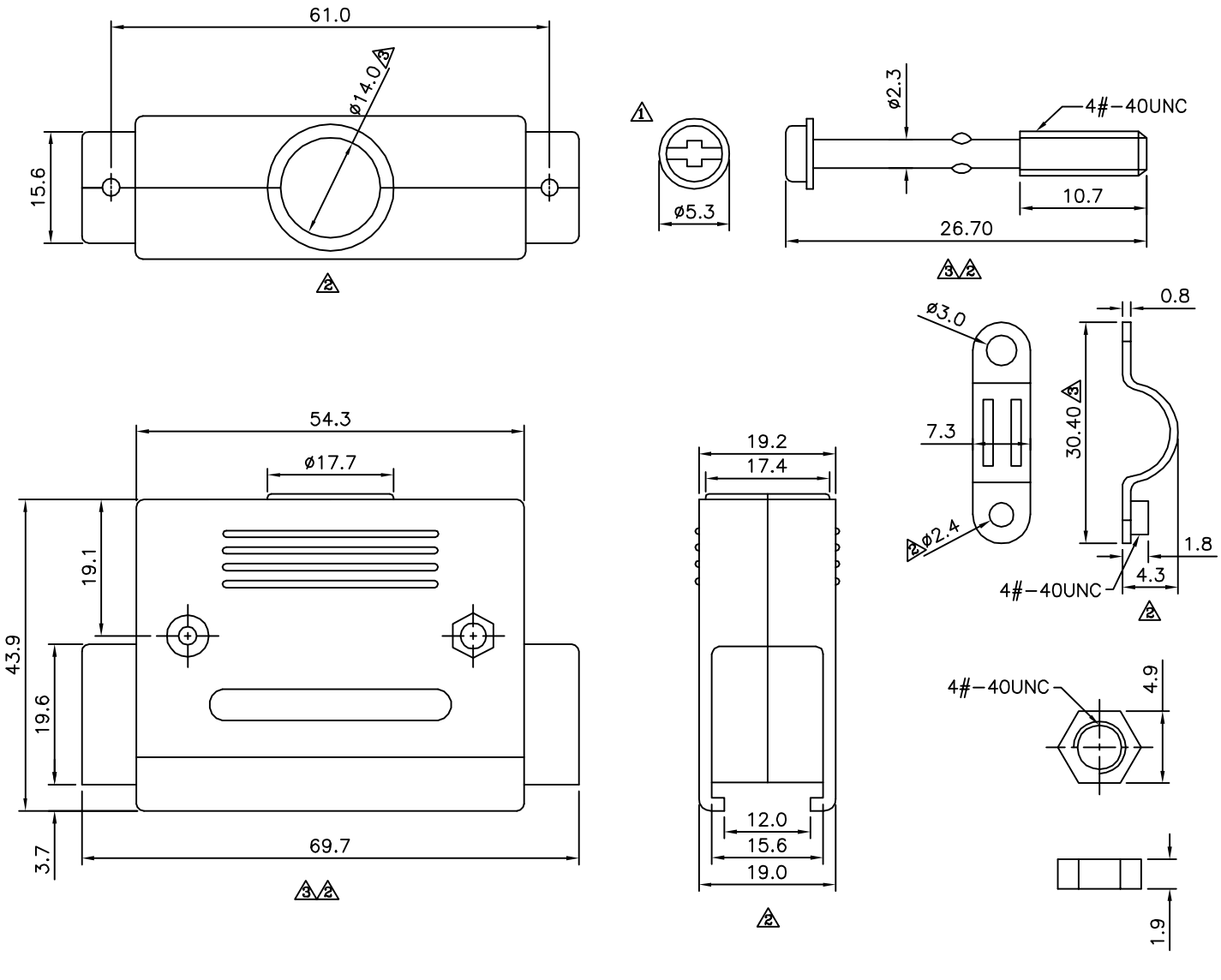

SPECIFICATION

Insulator:ABS(UL94-HB)

Screw & Nut & Clip And Other:Steel, Nickel Plated

Packing:1 Bag/Set

RoHS Compliant

ITEM	Insulator color
03172	Black
03164	Beige
03157	Gray
03186	Chrome Plated

4UCON 元化興業股份有限公司 4UCON TECHNOLOGY INC.

DRAWING No.	APPROVED BY	MEI	UNLESS OTHERWISE SPECIFIED TOLERANCES ARE
03157	CHECKED BY	HZF	2 X. ±0.5 .X ±0.3 .XX ±0.2 ANG. ±5°
	DRAWING BY	CYP	
SCALE NONE	REV.	A3	UNIT mm

NO.	REV.	REVISIONS	CHK	DATE
3	A3	Modify Data	HZF	06/29/2016
2	A2	Modify Data	HZF	05/13/2013
1	A1	Modify Data	HZF	02/12/2009
0	A0	NEW RELEASE	HZF	05/08/2008