File No.	083	SHEET	1/1

SPECIFICATION
Material:PVC,Gray
RoHS Compliant

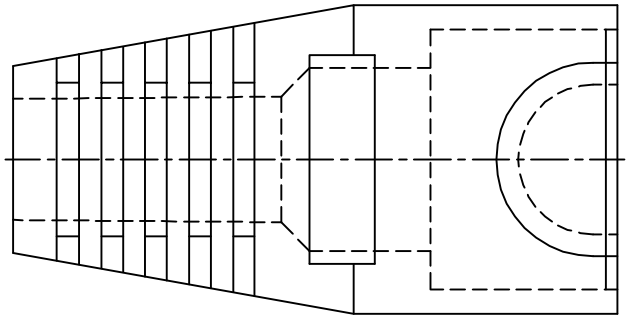

1

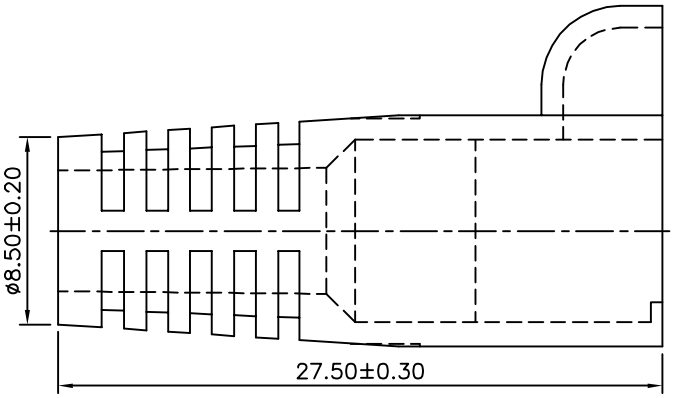

1

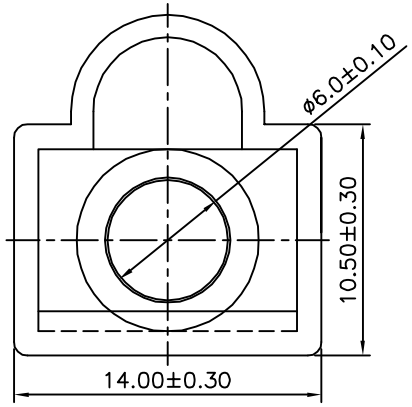

1

4UCON 元化興業股份有限公司
4UCON TECHNOLOGY INC.

DRAWING No.	APPROVED BY MEI	UNLESS OTHERWISE SPECIFIED TOLERANCES ARE
04801	CHECKED BY HZF	1 .X ±0.38 .XX ±0.25 ANG.
	DRAWING BY WZL	
SCALE NONE	REV. A1	UNIT mm

NO.	REV.	REVISIONS	CHK	DATE
1	A1	Modify Data	HZF	08/09/2010
0	A0	NEW RELEASE		