File No.	697NJ20806	SHEET	1/1

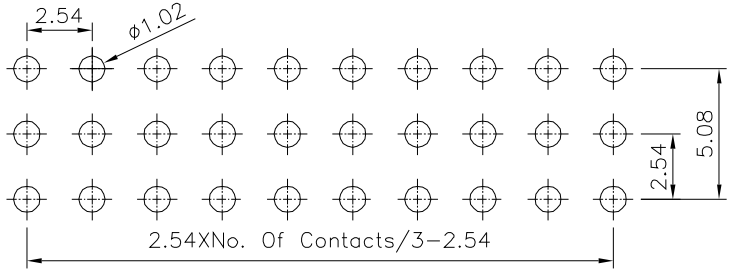

Recommended P.C.B. Layout(Top View)
(PCB Board Tolerance±0.05)

SPECIFICATION
Current Rating:3A
Withstand Voltage:1000V AC
Contact Resistance:20 Milliohms Max.
Insulation Resistance:1000 Megaohms Min.
Operation Temperature:−40°C~+105°C
Contact:Brass,Gold Flash Over Nickel
3 Insulator:PA9T(UL94V−0),Black
RoHS Compliant

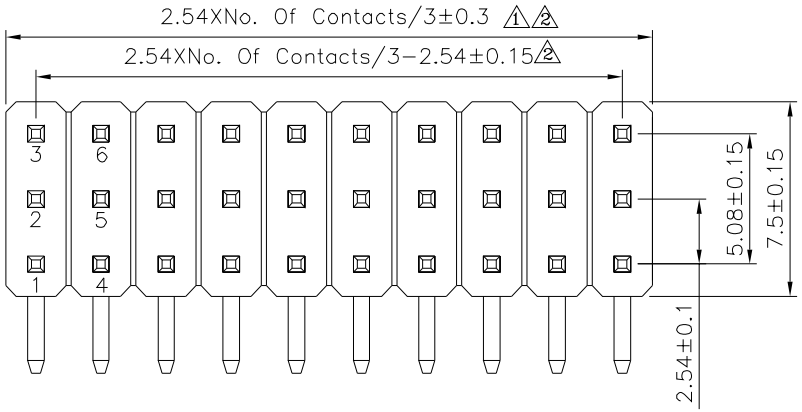

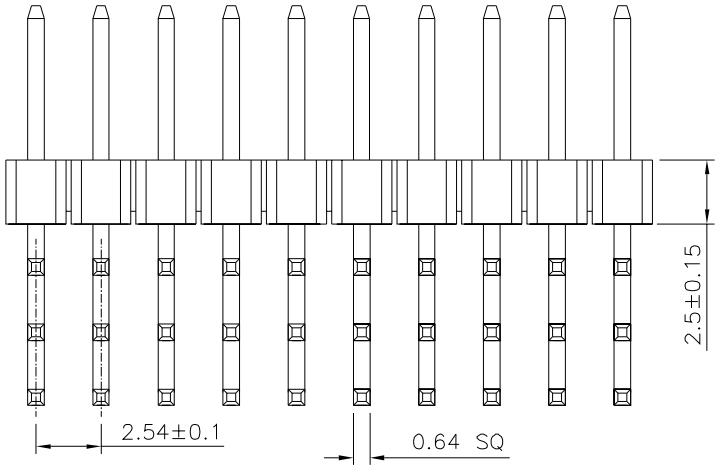

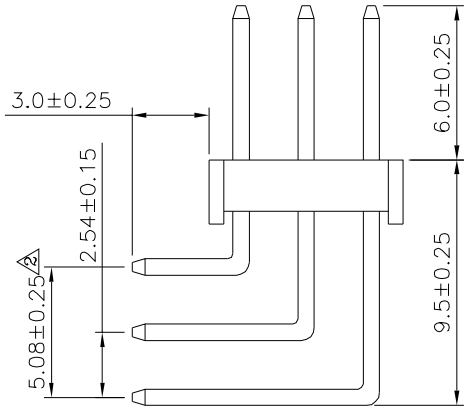

4UCON 元化興業股份有限公司 4UCON TECHNOLOGY INC.

DRAWING No.	APPROVED BY MEI	UNLESS OTHERWISE SPECIFIED TOLERANCES ARE
07581	CHECKED BY HZF	X. ±0.25 X.° ±2° .X ±0.20 .X° ±1.5° .XX ±0.15 .XX° ±1° .XXX ±0.10 .XXX° ±0.5°
	DRAWING BY CYP	
SCALE NONE	REV. A3	UNIT mm

NO.	REV.	REVISIONS	CHK	DATE
3	A3	Modify Data	HZF	10/20/2023
2	A2	Modify Data	HZF	01/12/2022
1	A1	Modify Data	HZF	02/08/2017
0	A0	NEW RELEASE	HZF	08/09/2014