File No.	189IC12217	SHEET	1/1

SPECIFICATION
Contacts:Phosphor Bronze
Wire Size:22~28 AWG Crimp Contacts
Q'ty:2500 PCS/Reel
RoHS Compliant

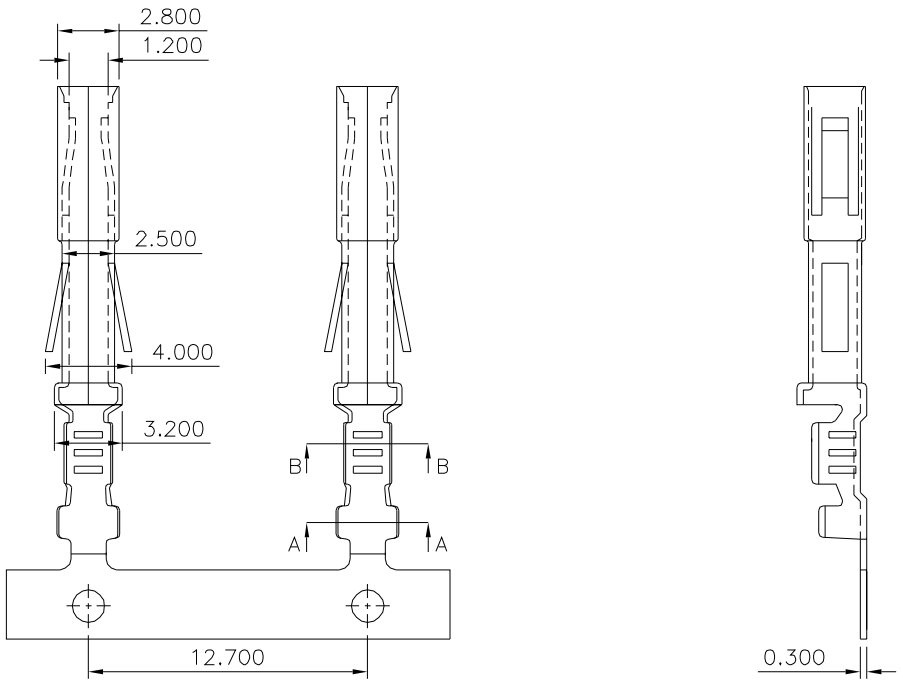

Item	Contact Finish
07916	Gold Flash Over All,Over Nickel
05577	Gold Plated 5u" Over All,Over Nickel

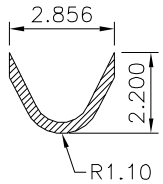

Section A–A

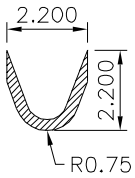

Section B–B

4UCON 元化興業股份有限公司 4UCON TECHNOLOGY INC.

DRAWING No.	APPROVED BY MEI	UNLESS OTHERWISE SPECIFIED TOLERANCES ARE .XX ±0.150 .XXX ±0.150 ANG.
07916	CHECKED BY HZF	
	DRAWING BY CYP	
SCALE NONE	REV. B0	UNIT mm

NO.	REV.	REVISIONS	CHK	DATE
0	B0	Modify Data	HZF	02/27/2018
0	B0	NEW RELEASE	HZF	02/27/2018