File No.	689FF01806	SHEET	1/1

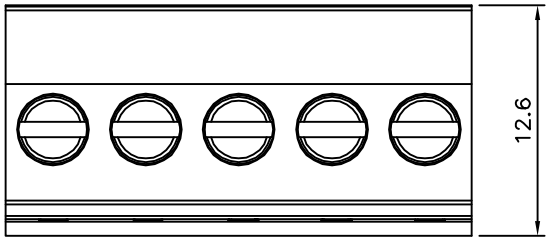

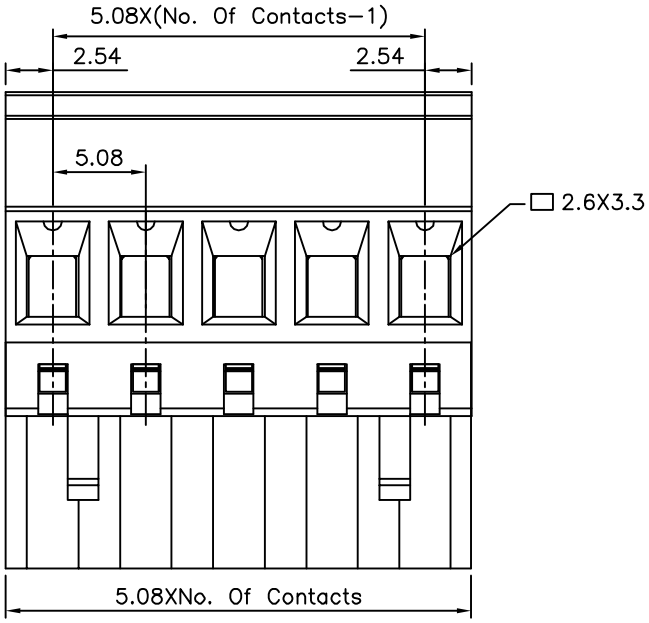

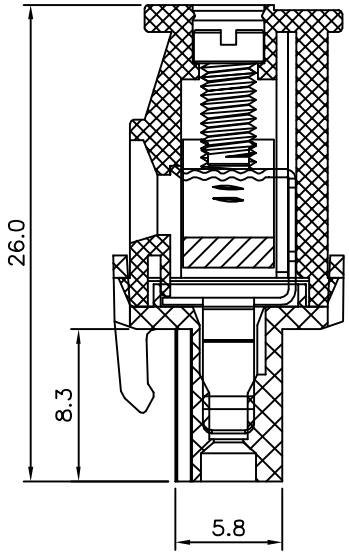

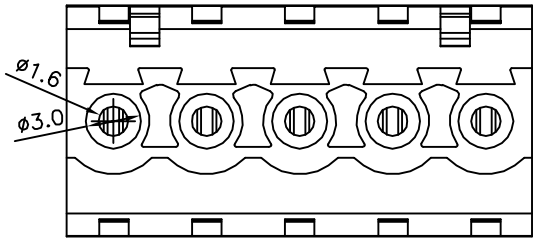

SPECIFICATION

Current Rating:16 Amp/Way Max.
Voltage Rating:300V AC
Contact Resistance:20 Milliohms Max.
Withstanding Voltage:2500V AC(1 Minute)
Test Time=60 Sec./1 PCS
Operation Temperature:−40°C~+105°C
Soldering Reliability:Test Temperature=250°C±10°C/
5 Seconds Max.
Wire Range:12~26 AWG
Torque:5.0 kgf.cm/M3
Insulator Body(Housing):Polyamide(UL94V−0),Green
1 Contact(Metal Housing):Copper Alloy,Nickel Plated
1 Wire Guard:Copper Alloy,Tin Plated
Terminal Screw:Steel,Galvanized With Cr3+ Plated
RoHS Compliant

4UCON 元化興業股份有限公司 4UCON TECHNOLOGY INC.

DRAWING No.	APPROVED BY	EMILY	UNLESS OTHERWISE SPECIFIED TOLERANCES ARE
09272	CHECKED BY	HZF	X. ±0.50 .X ±0.30 .XX ±0.20 X° ±1°
	DRAWING BY	CYP	
SCALE NONE	REV.	A1	UNIT mm

NO.	REV.	REVISIONS	CHK	DATE
1	A1	Modify Data	HZF	06/01/2015
0	A0	NEW RELEASE	HZF	06/21/2011