File No.	364	SHEET 1 / 1

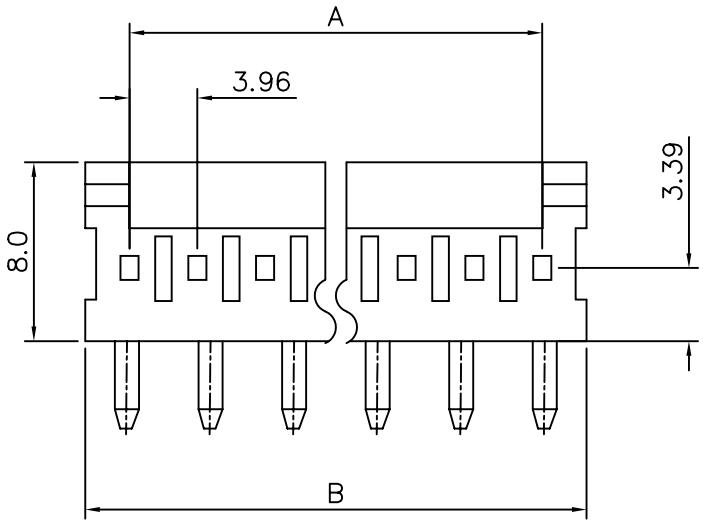

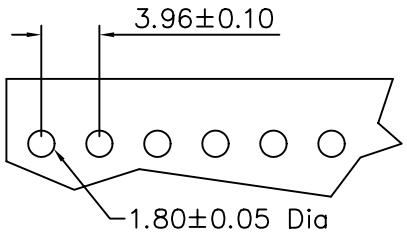

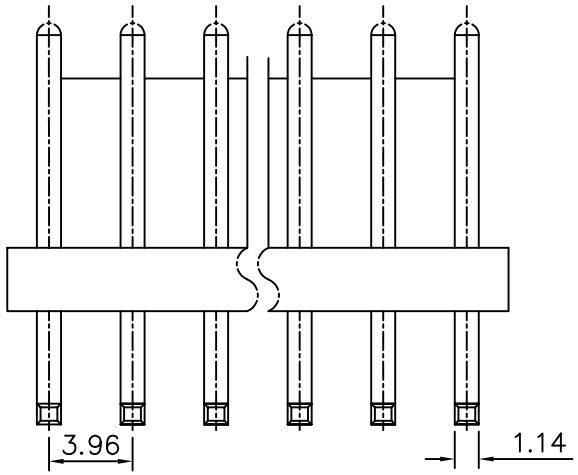

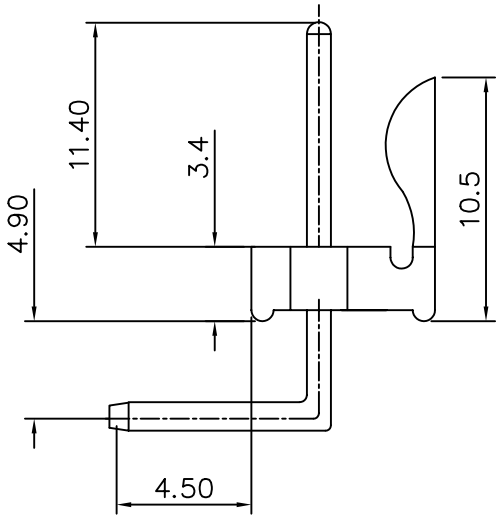

SPECIFICATIONS

Current Rating: 4A AC, DC
Voltage Rating: 250V AC, DC
Base:Nylon UL 94V-2 Or UI 94V-0
Post:Copper Alloy,1.14mm Square Pin
Tin-plated Or Gold Plated

Poles	Dimension mm		Poles	Dimension mm	
	A	B		A	B
2	3.96	7.96	14	51.48	55.48
3	7.92	11.92	15	55.44	59.44
4	11.88	15.88	16	59.40	63.40
5	15.84	19.84	17	63.36	67.36
6	19.80	23.80	18	67.32	71.32
7	23.76	27.76	19	71.28	75.28
8	27.72	31.72	20	75.24	79.24
9	31.68	35.68	21	79.20	83.20
10	35.64	39.64	22	83.16	87.16
11	39.60	43.60	23	87.12	91.12
12	43.56	47.56	24	91.08	95.08
13	47.52	51.52			

4UCON 元化興業股份有限公司
4UCON TECHNOLOGY INC.

DRAWING No.	APPROVED BY MEI	UNLESS OTHERWISE SPECIFIED TOLERANCES ARE
09549	CHECKED BY RAN	.X ±0.38
	DRAWING BY HZF	.XX ±0.25
		.XXX
SCALE NONE	REV. A	UNIT mm

AREA	REVISIONS	CHK	DATE