File No.	352	SHEET 1 / 1

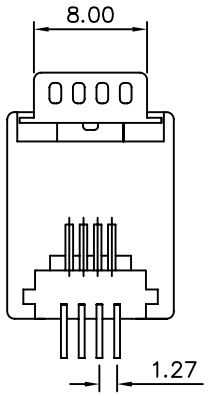

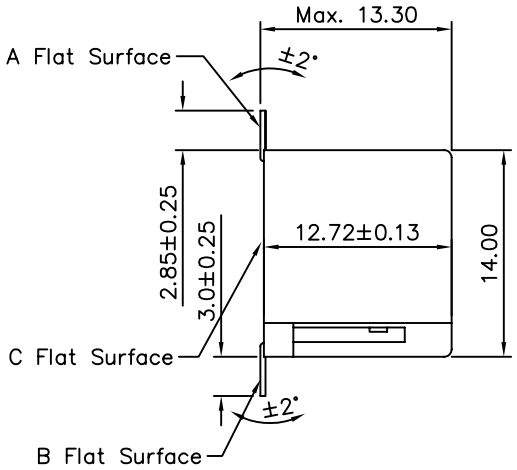

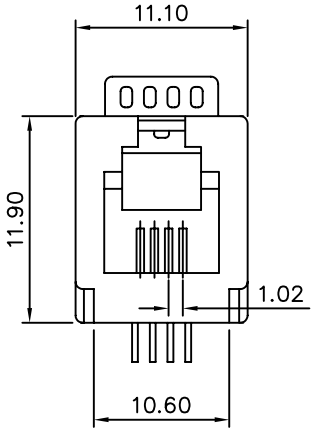

MATERIALS

Housing: DSM Stanyl TE250F6(Nylon 66)
Heat Deflection Temp.290°C
Black Color,UL94V-0
Or: Nylon Zytel FR-52
Heat Deflection Temp.278°C
Black Color,UL94V-0
Terminal: 0.35mm Thick Phos-Bronze
Plated With Hard Gold And
Tin/Lead In Solder Area
Hold Down: 0.35mm Thick Copper Alloy,
Plated With Tin-Lead

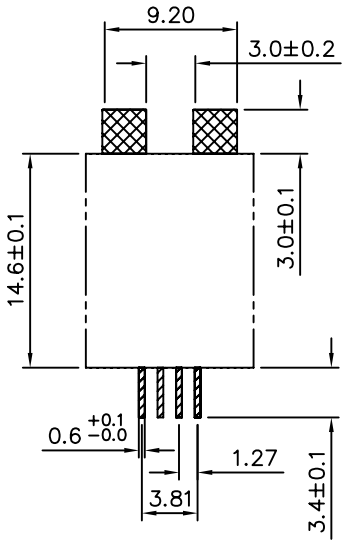

PCB Layout

NOTE
1.A and B highest point must over C flat surface.
2.The maximum distance(0.15m/m) between lowest and highest on A and B flat surface.

4UCON 元化興業股份有限公司
4UCON TECHNOLOGY INC.

DRAWING No.	APPROVED BY	UNLESS OTHERWISE SPECIFIED TOLERANCES ARE
14855	MEI	.X ±0.25
	CHECKED BY BECKY	.XX ±0.13
	DRAWING BY HZF	.XXX ±0.05
SCALE NONE	REV. A0	UNIT mm

NO.	REV.	REVISIONS	CHK	DATE
0	A0	NEW RELEASE	BECKY	2004/07/16