File No.	013	SHEET 1 / 1

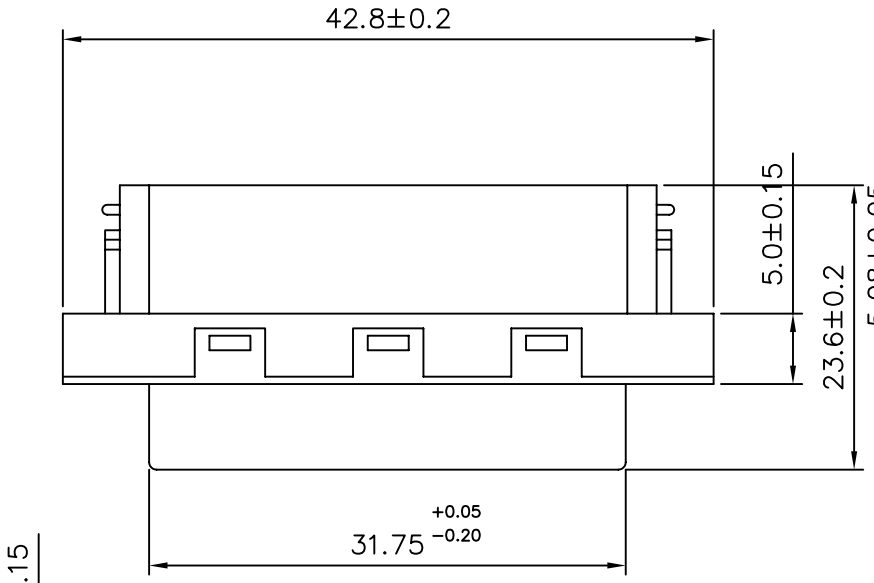

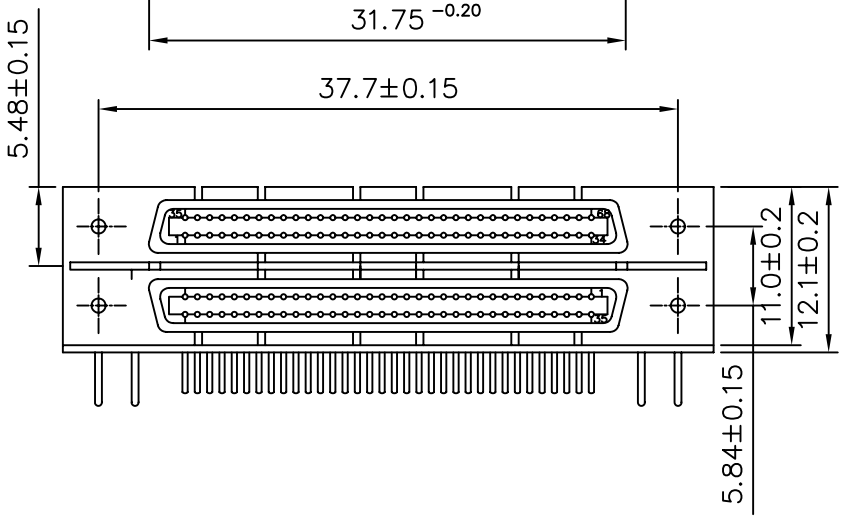

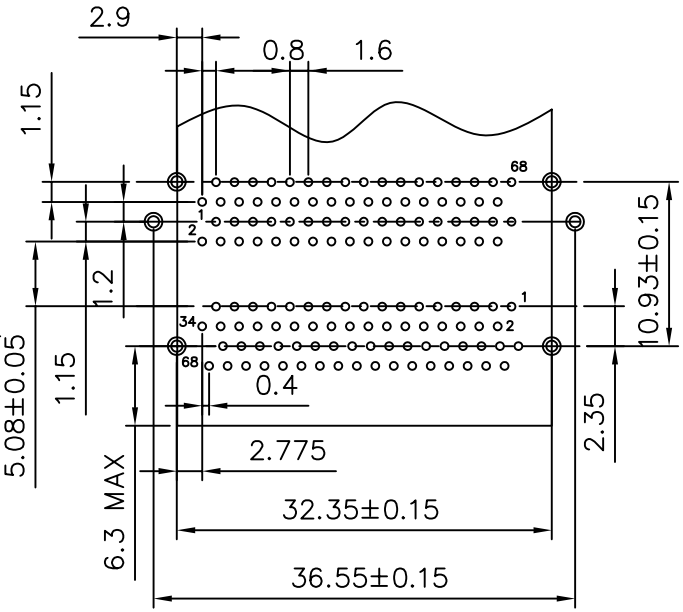

Recommended PCB Layout

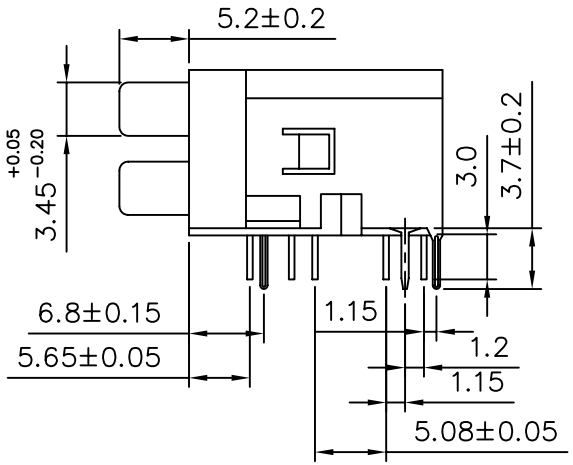

SPECIFICATIONS

Current Rating:0.5AMP
Dielectric Withstanding Voltage:250VAC
Insulation Resistance:500 Megohms Min.
Contact Resistance:80 Milliohms Max.
Operation Temperature:−55°C To +85°C
Insulator:Thermoplastic UL 94V−0
Contacts:Phosphor Bronze
30u"Min.Gold On Mating End
120u"Min Tin−Lead On Termination End
All Underplated 50u"Min. Nickel
Shell:Cold Roller Steel
120u"min Nickel Or Bright
Tin Over 80u"Min.Copper

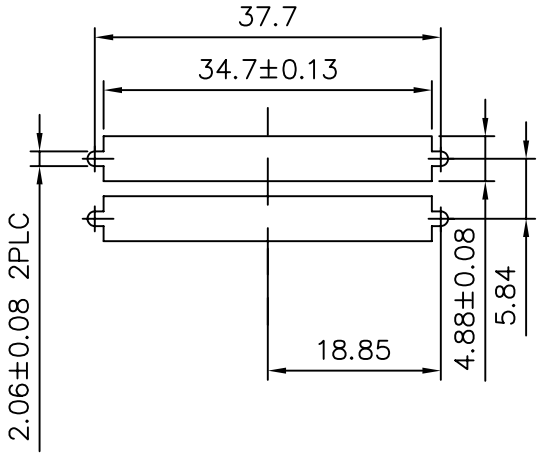

Bulkhead Cutouts For SBUS

4UCON 元化興業股份有限公司
4UCON TECHNOLOGY INC.

DRAWING No.	APPROVED BY	UNLESS OTHERWISE SPECIFIED TOLERANCES ARE			
15672	MEI	.X ±0.38			
	CHECKED BY BECKY	.XX ±0.25			
	DRAWING BY HZF	ANG.			
SCALE NONE	REV. B	UNIT mm			

NO.	REV.	REVISIONS	CHK	DATE
0	B	NEW RELEASE		