File No.	1820I06217	SHEET	1/1

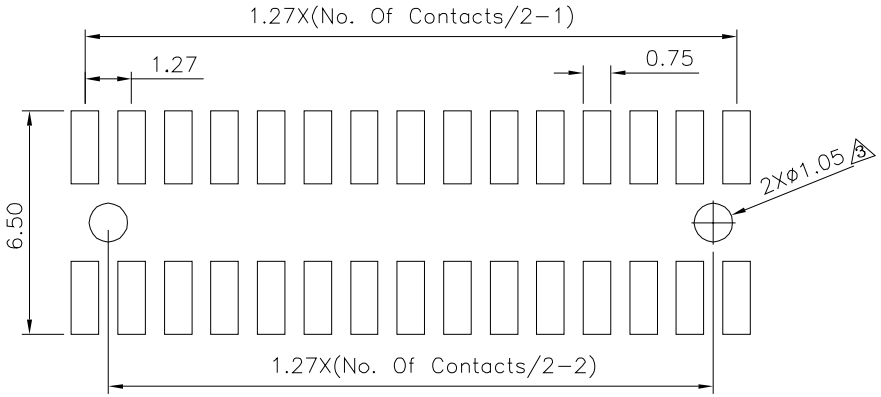

Recommended P.C.B. Layout

3 2 1 SPECIFICATION
Current Rating:1A
Voltage Rating:100V AC
Withstand Voltage:500V AC/Minute
Contact Resistance:20 Milliohms Max.
Insulation Resistance:1000 Megaohms Min.
Operation Temperature:−40°C~+105°C
Insulator:PA6T(UL94V−0),Black
Contact:Brass,Gold Flash Over Nickel
No. Of Contacts:06~100 Contacts
RoHS Compliant

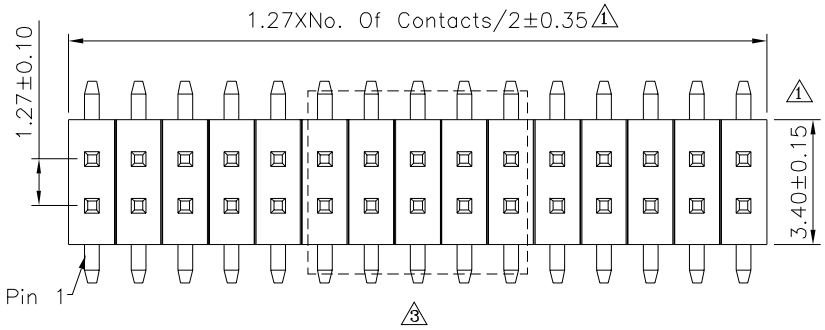

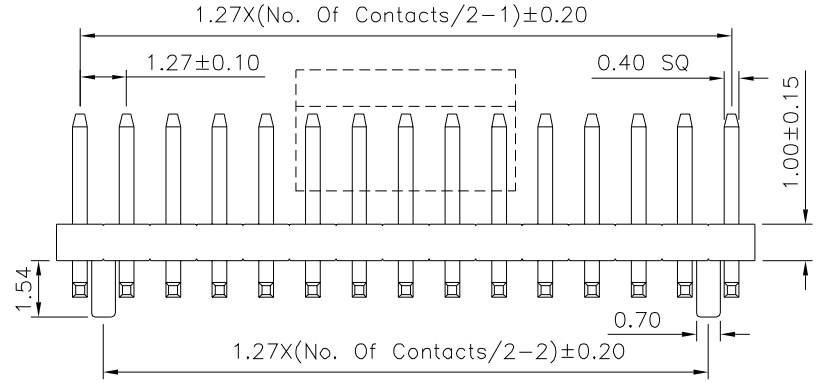

3 1 08~100 Pin

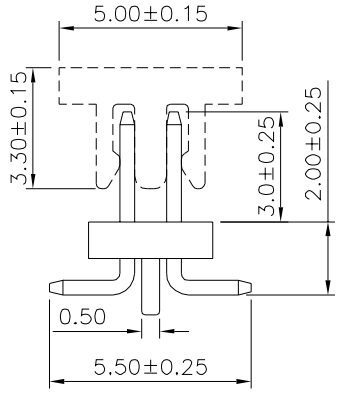

3 2 1

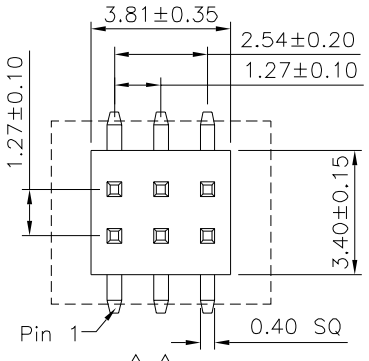

3 1

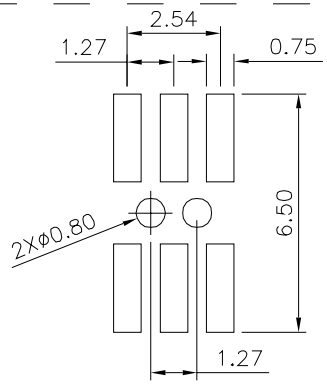

3 P.C.B. Layout

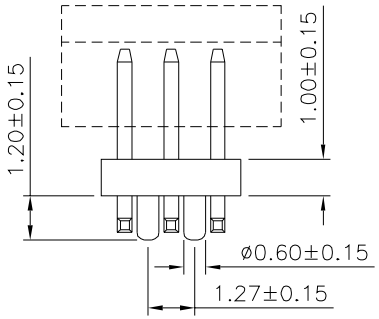

3 1

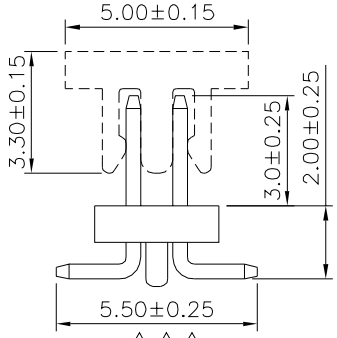

3 2 1

06 Pin

4UCON 元化興業股份有限公司 4UCON TECHNOLOGY INC.

DRAWING No. 3	APPROVED BY MEI	UNLESS OTHERWISE SPECIFIED TOLERANCES ARE 3 .X ±0.38 .XX ±0.25 .XXX ±0.05
16933	CHECKED BY HZF	
	DRAWING BY CYP	
SCALE NONE	REV. A3	UNIT mm

NO.	REV.	REVISIONS	CHK	DATE
3	A3	Modify Data	HZF	09/06/2024
2	A2	Modify Data	HZF	09/22/2016
1	A1	Modify Data	HZF	07/29/2011
0	A0	NEW RELEASE	HZF	12/02/2008