File No.	410	SHEET	1/1

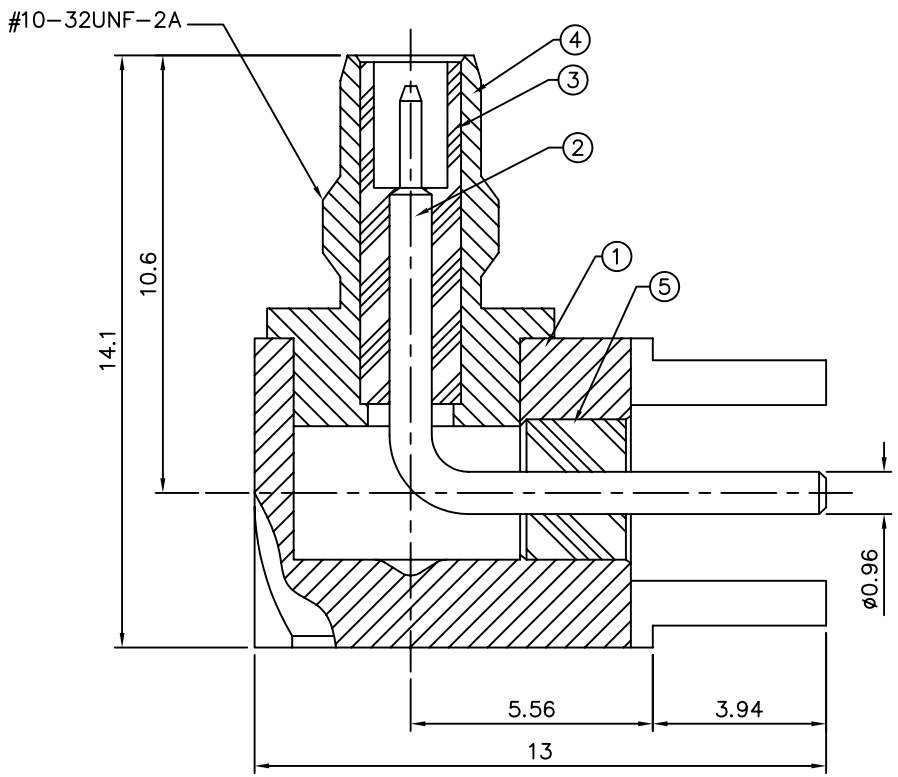

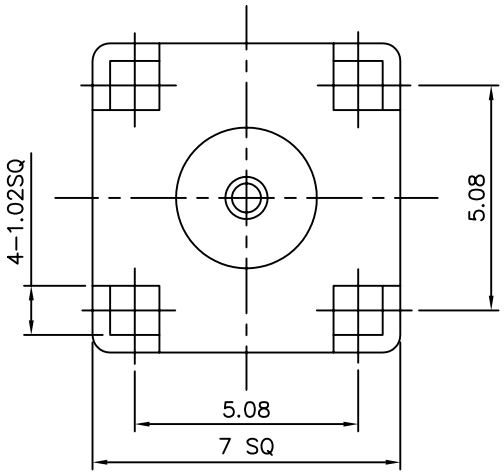

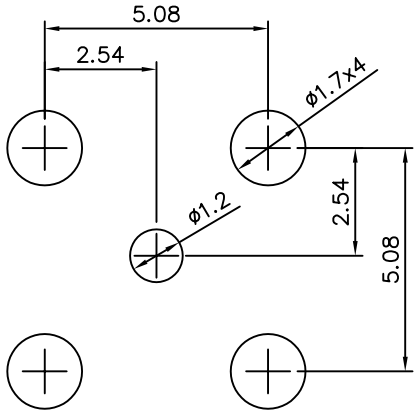

PCB Layout

Notes: Finish(Plating Thickness In Micro-Inches)
1. Brass Per QQ-B-626
2. Gold PL 3 Min. Over Nickel PL 70 Min. Thick Over Copper Strike
3. Gold PL 30 Min. Over Nickel PL 70 Min. Thick Over Copper Strike
4. Teflon MIL-P-19468

Item	Ohm
17572	50
17573	75

No.	Description	Material	Finish	Q'ty
5	Insulator	Note 4	White	1
4	Insulator	Note 4	White	1
3	Body	Note 1	Note 2	1
2	Contact Pin	Note 1	Note 3	1
1	Cube Body	Note 1	Note 2	1

4UCON 元化興業股份有限公司
4UCON TECHNOLOGY INC.

DRAWING No.	APPROVED BY MEI	UNLESS OTHERWISE SPECIFIED TOLERANCES ARE
17572	CHECKED BY BECKY	0.5~6 ±0.2 >6~30 ±0.4 >30~120 ±0.6 >120~315 ±1 >315~1000 ±1.6 ANG. ±5°
	DRAWING BY HZF	
SCALE NONE	REV. A0	UNIT mm

NO.	REV.	REVISIONS	CHK	DATE
0	A0	NEW RELEASE	BECKY	02/16/2006