File No.	668HJ13805	SHEET	1/1

SPECIFICATION

100% Open Short & Miswire Test.

RoHS Compliant

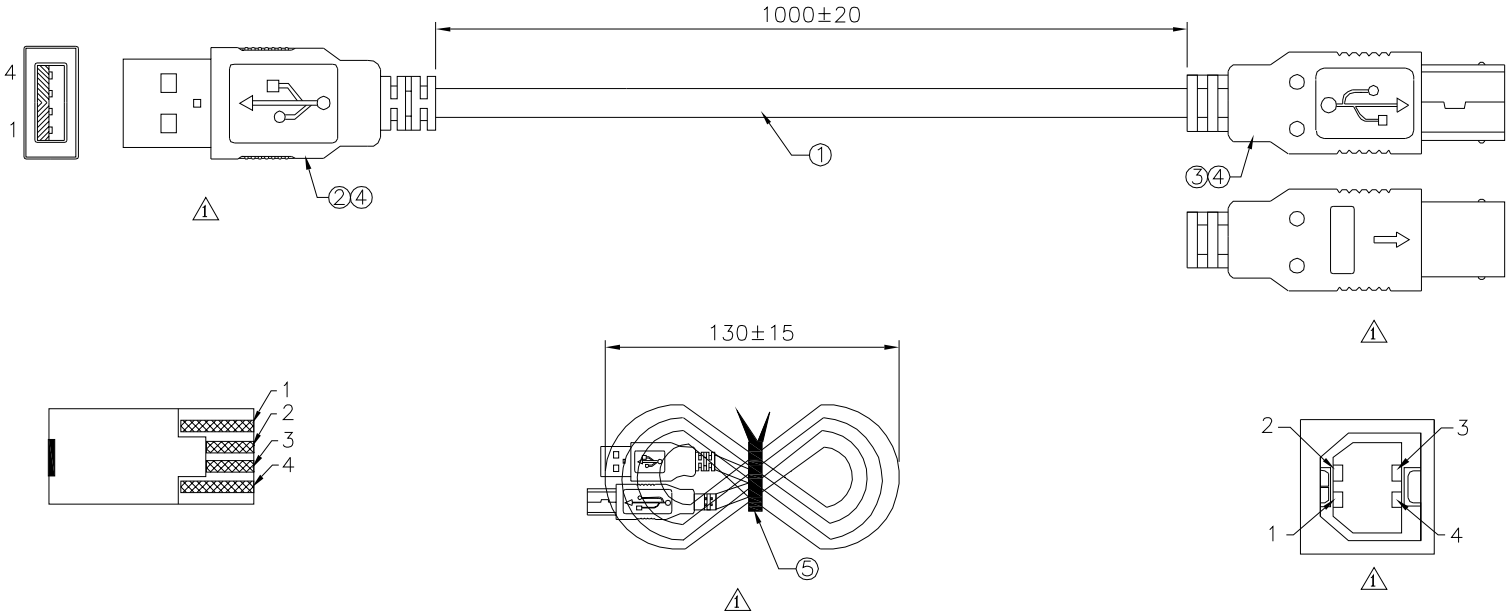

1

Pin Assignment		
USB A/M		USB B/M
1.Red		1.Red
2.White		2.White
3.Green		3.Green
4.Black		4.Black
Shell	Braid	Shell

No.	Name	Q'ty	Description
①	Cable	1 PCS	UL2725 #28*1P+#26*2C+AL+48/0.10BS Black OD=4.0mm
②	USB Plug A	1 PCS	USB A Type Male Solder Wire White Insulator
③	USB Plug B	1 PCS	USB B Type Male Solder Wire White Insulator
④	Mold	10g	45P Black PVC
⑤	Cable Ties	1 PCS	Black PVC L=85mm

4UCON 元化興業股份有限公司 4UCON TECHNOLOGY INC.

DRAWING No.	APPROVED BY MEI	UNLESS OTHERWISE SPECIFIED TOLERANCES ARE .X ±0.38 .XX ±0.25 ANG.
21116	CHECKED BY HZF	
	DRAWING BY CYP	
SCALE NONE	REV. A1	UNIT mm

NO.	REV.	REVISIONS	CHK	DATE
1	A1	Modify Data	HZF	10/13/2017
0	A0	NEW RELEASE	HZF	09/21/2017