File No.	020KH05805	SHEET	1/1

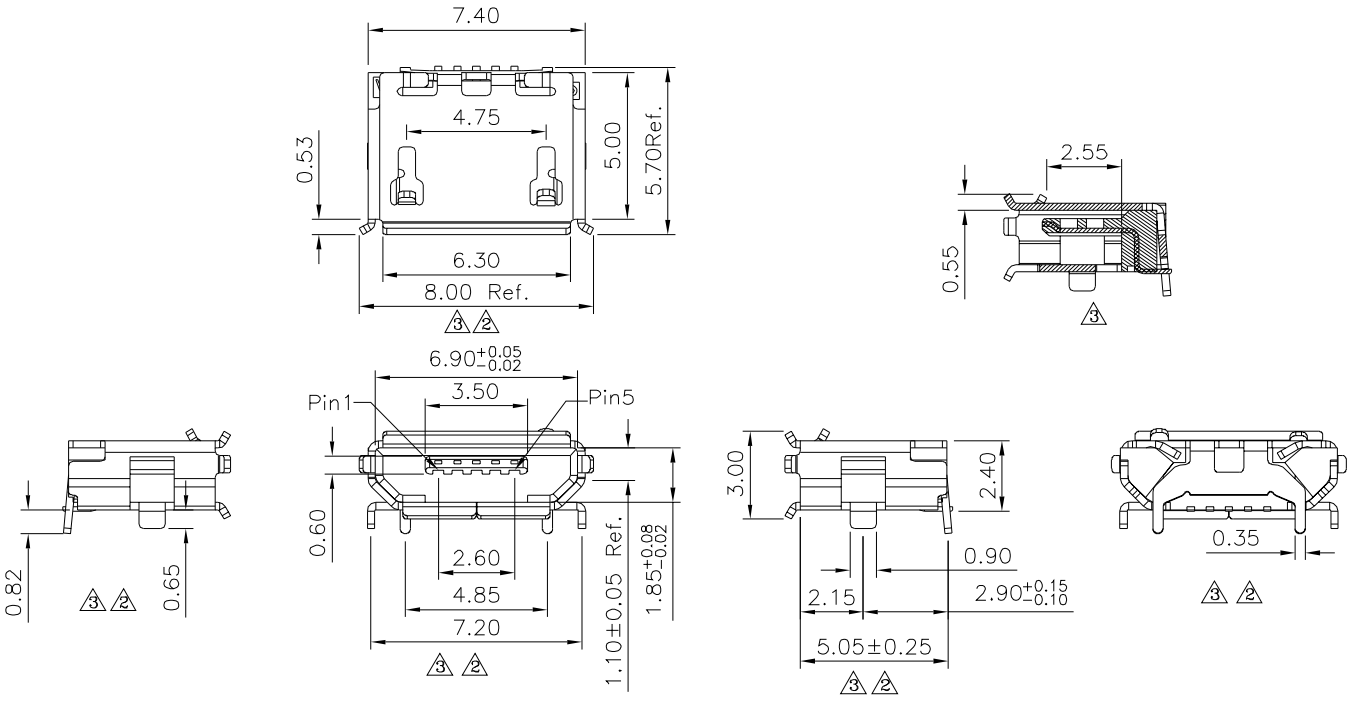

SPECIFICATION

Current Max.:1,5Pin 1.8A Max/2,3,4Pin 1A Max.
Voltage Max.:30V
Withstanding Voltage:100V AC For 1 Minute
Contact Resistance:30 Milliohms Max.
Insulation Resistance:100 Megaohms Min.
Mating Force:3.57 Kgf Max.
Withdrawal Force:1.0 Kgf Min.
Durability:10000 Cycles Min.
Temperature Range:−55°C~125°C
Housing:LCP+30%G.F.(UL94V−0),Black
Contact:Phosphor Bronze,Gold Flash Over Nickel
Shell:Stainless Steel,Matte Tin Plated Over Nickel
RoHS Compliant

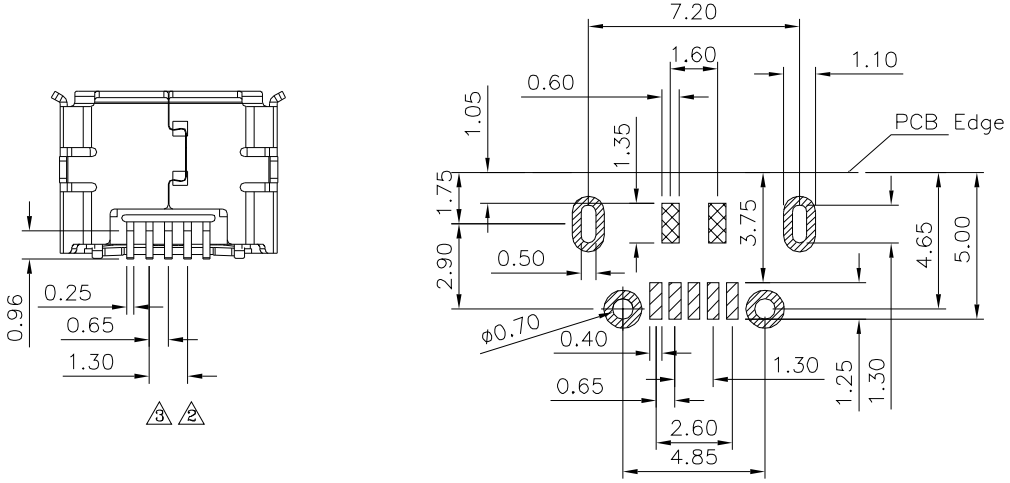

Recommended P.C.B. Layout

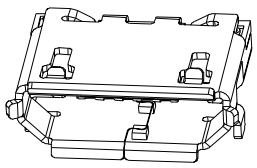

3	A3	Modify Data	HZF	08/05/2020
2	A2	Modify Data	HZF	03/19/2020
1	A1	Modify Data	HZF	03/09/2020
0	A0	NEW RELEASE	HZF	09/04/2019
NO.	REV.	REVISIONS	CHK	DATE

4UCON 元化興業股份有限公司 4UCON TECHNOLOGY INC.

DRAWING No.	APPROVED BY MEI	UNLESS OTHERWISE SPECIFIED TOLERANCES ARE
22043	CHECKED BY HZF	.X ±0.30 .X° ±2° .XX ±0.20 .XX° ±1° .XXX ±0.10 3
	DRAWING BY CYP	
SCALE NONE	REV. A3	UNIT mm