File No.	697OL16804	SHEET	1/1

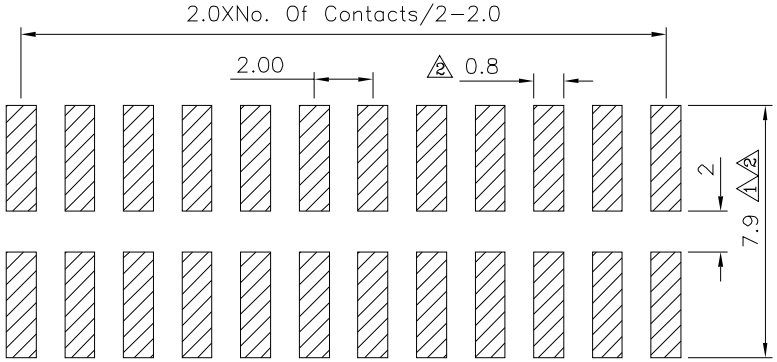

Recommend P.C.B Board Layout

PCB Tolerance:±0.05(Top View)

SPECIFICATION

Current Rating:1.5A
Withstand Voltage:500V AC Min./Minute
Contact Resistance:20 Milliohms Max.
Insulation Resistance:1000 Megaohms Min.
Operation Temperature:−40°C~+105°C
2 Housing:PA9T(UL94V−0),Black
Contact:Brass,Gold Flash Over Nickel
RoHS Compliant

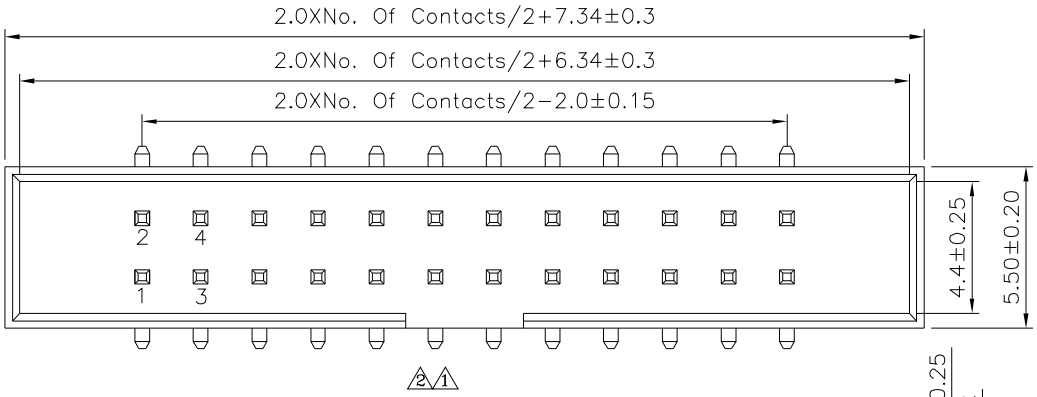

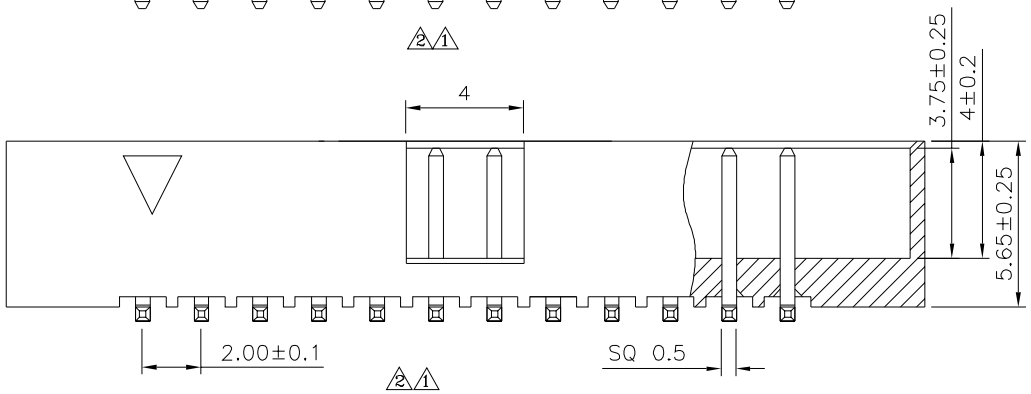

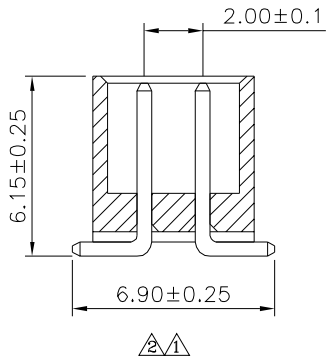

4UCON 元化興業股份有限公司 4UCON TECHNOLOGY INC.

DRAWING No.	APPROVED BY MEI	UNLESS OTHERWISE SPECIFIED TOLERANCES ARE 2
22795	CHECKED BY HZF	X. ±0.30 X.° ±2° .X ±0.25 .X° ±1.5° .XX ±0.20 .XX° ±1.0° .XXX ±0.15 .XXX° ±0.5°
	DRAWING BY CYP	UNIT mm
SCALE NONE	REV. A2	

NO.	REV.	REVISIONS	CHK	DATE
2	A2	Modify Data	HZF	12/16/2024
1	A1	Modify Data	HZF	05/23/2018
0	A0	NEW RELEASE	HZF	12/06/2013