File No.	HC3E-66A6-12	SHEET	1 / 1

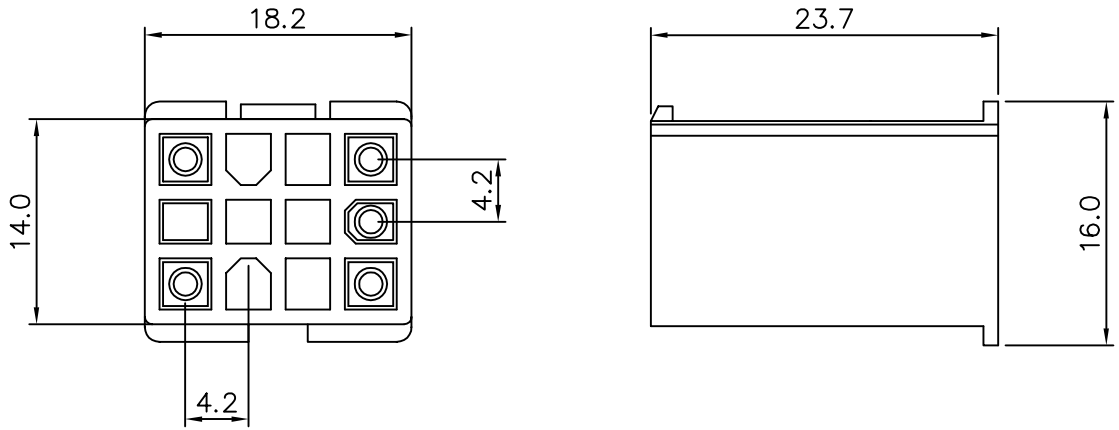

4UCON 元化興業股份有限公司
4UCON TECHNOLOGY INC.

DRAWING No.	APPROVED BY MEI	UNLESS OTHERWISE SPECIFIED TOLERANCES ARE
02299	CHECKED BY RAN	.X ±0.38 .XX ±0.25 ANG.
	DRAWING BY HZF	
SCALE NONE	REV. A	UNIT mm

AREA	REVISIONS	CHK	DATE