File No.	387	SHEET 1 / 1

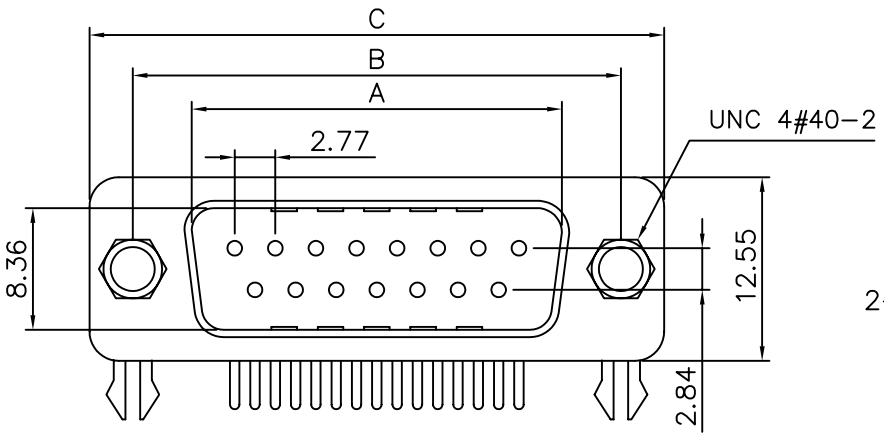

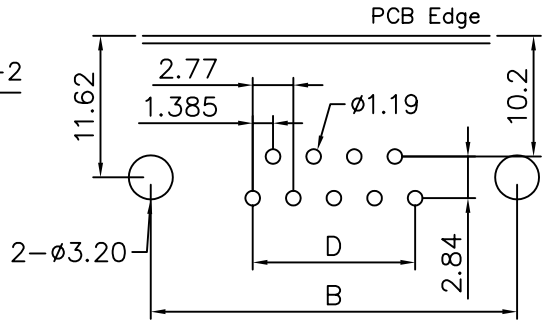

SPECIFICATIONS

Current Rating: 5A
Dielectric Withstanding Voltage : AC 1000V R.M.S.
Insulation Resistance : 1000 Megohms Min. At DC 500V
Contact Resistance : 15 Milliohms Max.10 Ses.
Operating Temperature : −55°C To +105°C
Insulator : PBT+30% Glass Fiber (UL 94V−0)Black
Contact Material : Brass ,Gold Over Nickel
Shell : Steel Nickel Plated

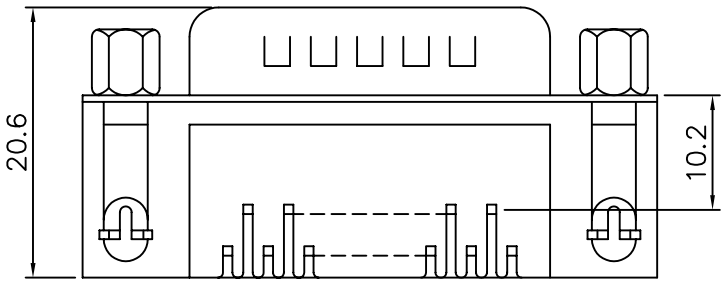

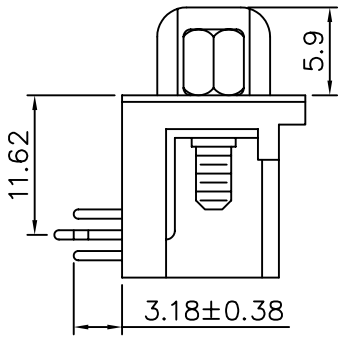

Position	A±0.20	B±0.25	C±0.38	D
9	16.92	24.99	30.80	11.08
15	25.25	33.32	39.10	19.39
25	38.96	47.04	53.00	33.24
37	55.42	63.50	69.32	49.86

4UCON 元化興業股份有限公司
4UCON TECHNOLOGY INC.

DRAWING No.	APPROVED BY MEI	UNLESS OTHERWISE SPECIFIED TOLERANCES ARE
03120	CHECKED BY RAN	.X ±0.25
	DRAWING BY LXH	.XX ±0.15
		.XXX ±0.05
SCALE NONE	REV. A	UNIT mm

AREA	REVISIONS	CHK	DATE