File No.	353QD09237	SHEET	1/1

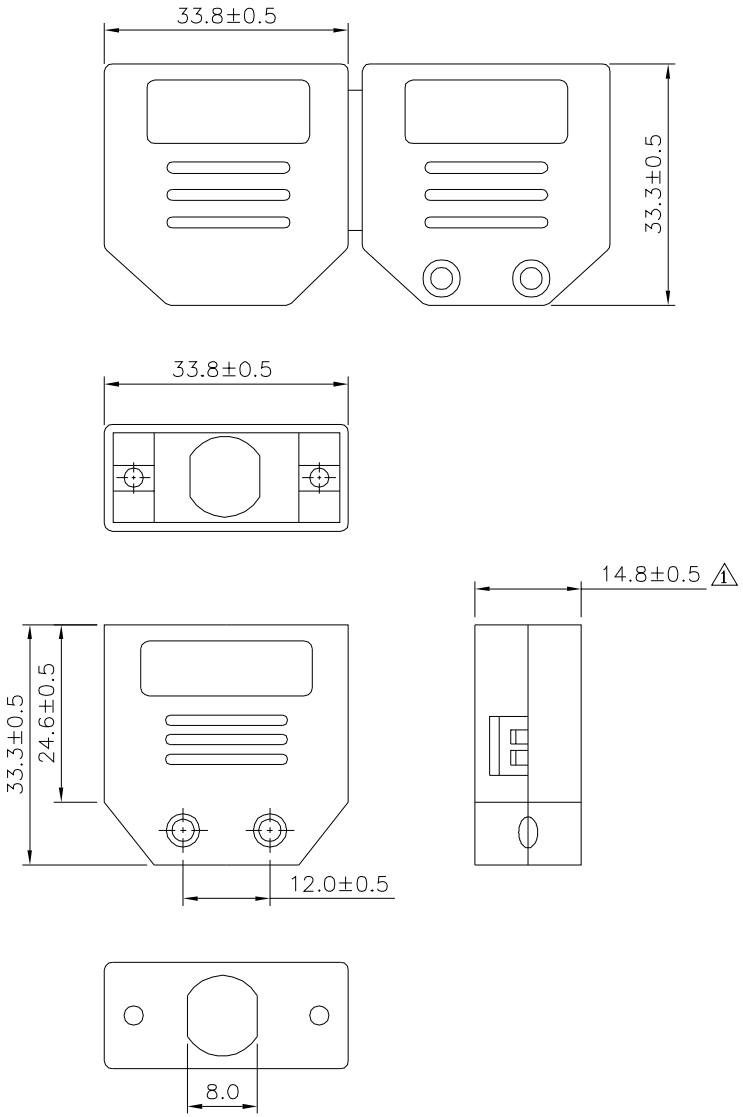

SPECIFICATION

Insulator:PP(UL94HB),Black
Screw:Steel,Nickel Plated
Q'ty:1 Set/Bag
RoHS Compliant

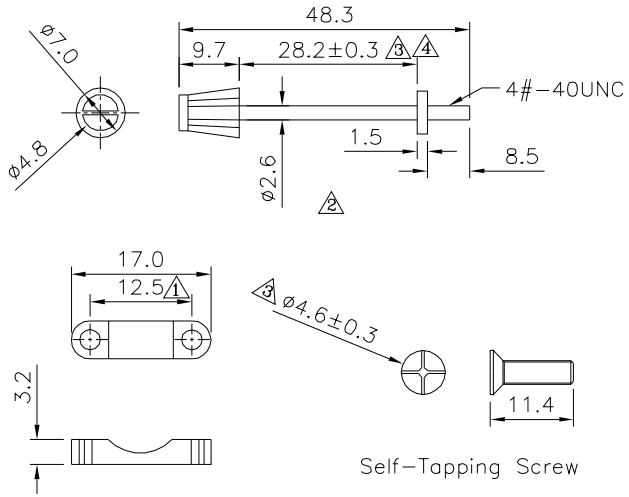

4UCON 元化興業股份有限公司 4UCON TECHNOLOGY INC.

DRAWING No.	APPROVED BY Jason Wu	UNLESS OTHERWISE SPECIFIED TOLERANCES ARE X. ±0.5 .X ±0.3 .XX ±0.2 ANG. ±5°
03388	CHECKED BY Leo Han	
	DRAWING BY Michelle Lee	
SCALE NONE	REV. A4	UNIT mm

NO.	REV.	REVISIONS	CHK	DATE
4	A4	MOdify Data	HZF	04/09/2026
3	A3	Modify Data	HZF	02/24/2025
2	A2	Modify Data	HZF	07/09/2021
1	A1	Modify Data	HZF	01/22/2016
0	A0	NEW RELEASE	HZF	02/20/2013