File No.	613JD11801	SHEET	1/1

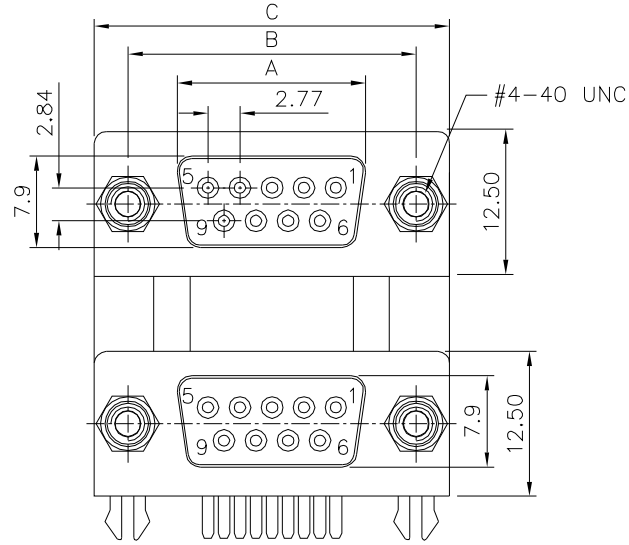

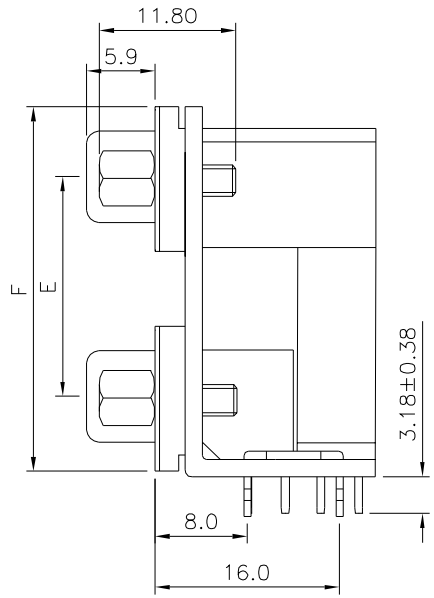

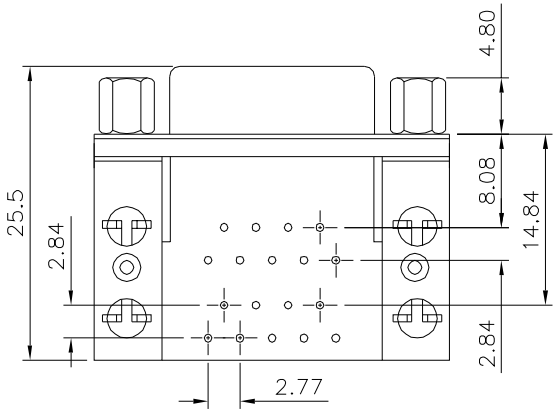

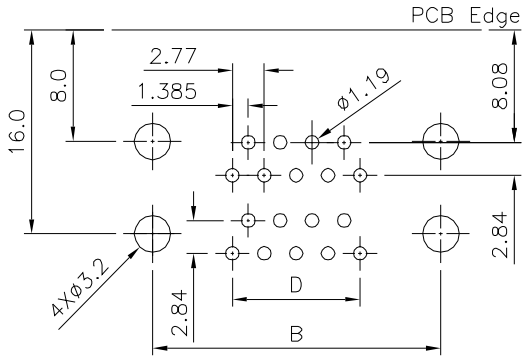

Recommended P.C.B. Layout

SPECIFICATION
Operation Voltage:250V AC Max.
Current Rating:5 Amp Max.
Dielectric Withstanding Voltage:1000V AC/Minute
Insulation Resistance:3000 Megaohms Min. At 500V DC
Contact Resistance:30 Milliohms Max.
Temperature Range:−55°C~+105°C
Insulator:PBT+30%G.F.(UL94V−0)
Contact:Brass
Gold Flash On Contact Area,
Tin Plated On Solder Tails,Over Nickel
Shell:Steel,Nickel Plated
Frame:Zinc Alloy,Nickel Plated
Rivet Boardlock:Brass,Tin Plated Over Nickel
RoHS Compliant

AUK P/N	E±0.15	F±0.15
DRBXXXXF15NJ−SXX−H	15.88	28.43
DRBXXXXF19NJ−SXX−H	19.05	31.60
DRBXXXXF22NJ−SXX−H	22.86	35.41

Pin	A±0.20	B±0.20	C±0.38	D
0909	16.30	25.00	30.80	11.08
1515	24.60	33.30	39.20	19.39
2525	38.35	47.05	53.05	33.24
3737	54.80	63.50	69.40	49.86

4UCON 元化興業股份有限公司 4UCON TECHNOLOGY INC.

DRAWING No.	APPROVED BY MEI	UNLESS OTHERWISE SPECIFIED TOLERANCES ARE .X ±0.38 .XX ±0.25 .XXX ±0.05 ANG. ±1°
05546	CHECKED BY HZF	
	DRAWING BY CYP	
SCALE NONE	REV. B0	UNIT mm

NO.	REV.	REVISIONS	CHK	DATE
0	B0	NEW RELEASE	HZF	03/26/2019