File No.	457NF21802	SHEET	1/1

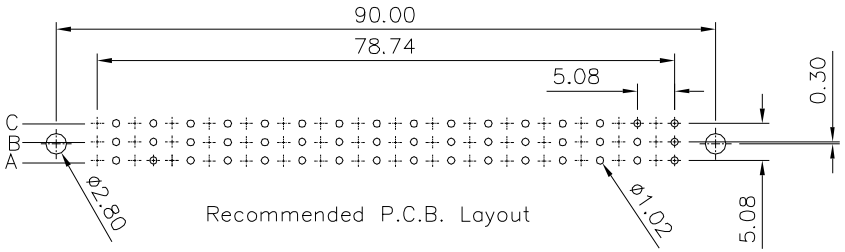

Recommended P.C.B. Layout

SPECIFICATION

Current Rating:3.0 Amp
Withstand Voltage:1000V AC/DC
Contact Resistance:30 Milliohms Max.
Insulation Resistance:1000 Megaohms Min.
Operation Temperature:−40°C~+105°C
Insulator:PBT(UL94V−0)
Contact:Phosphor Bronze,Gold Flash On Contact Area, Tin Plated On Solder Tails,Over Nickel
RoHS Compliant

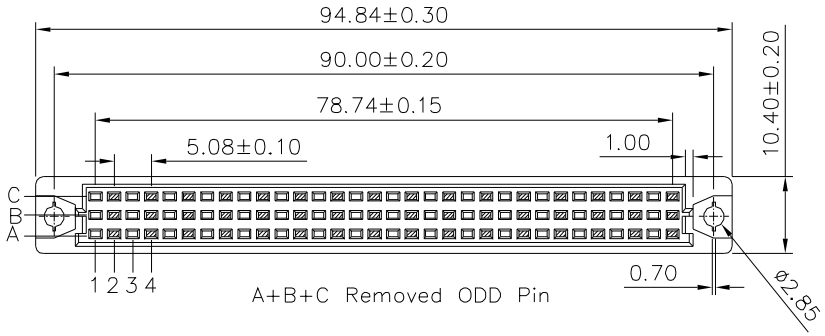

A+B+C Removed ODD Pin

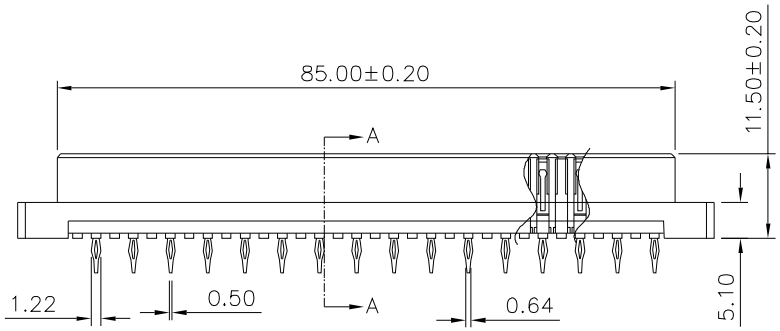

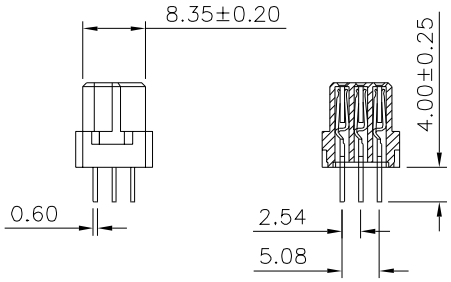

Section A−A

4UCON	元化興業股份有限公司 4UCON TECHNOLOGY INC.	DRAWING No. 07647	APPROVED BY MEI
			CHECKED BY HZF
			DRAWING BY LZX
		SCALE NONE	REV. A0

UNLESS OTHERWISE SPECIFIED TOLERANCES ARE
.X ±0.30
.XX ±0.20
.XXX ±0.10
ANG. ±3°
UNIT mm

NO.	REV.	REVISIONS	CHK	DATE
0	A0	NEW RELEASE	HZF	12/21/2022