File No.	689KF18806	SHEET	1/1

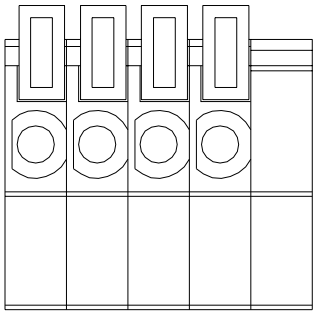

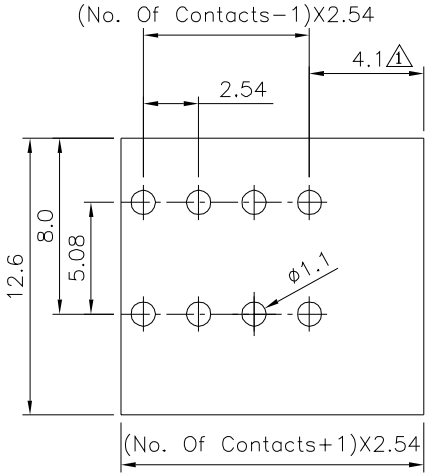

Recommended P.C.B. Layout

2 1 SPECIFICATION
Current Rating:2 Amp/Way Max.
Voltage Rating:150V AC
Withstanding Voltage:2000V AC(1 Minute)
Test Time=60s/PCS
Contact Resistance:20 Milliohms Max.
Wire Range:20~26 AWG
Operation Temperature:−40°C~+105°C
Test Temperature:250°C 5 Seconds Max.
Wire Guard:Stainless Steel
Surface Of Solder Tails:Copper Alloy,Tin Plated
4 Insulator Body(Housing):Polyamide+G.F.(UL94V−0),Green
RoHS Compliant
* 02~20P Available

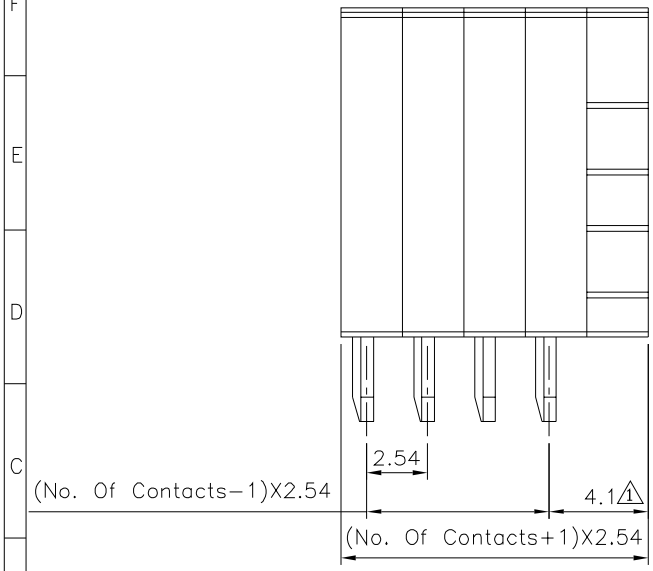

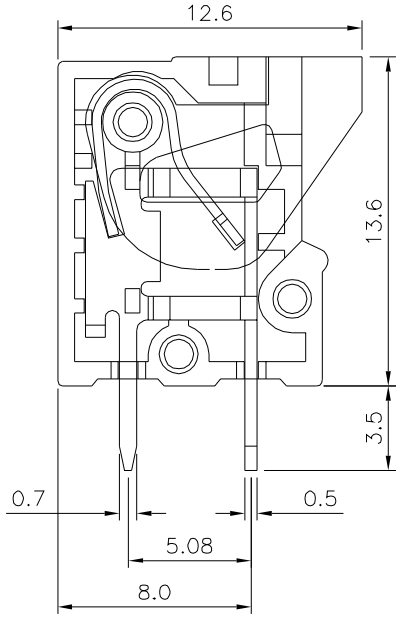

4UCON 元化興業股份有限公司 4UCON TECHNOLOGY INC.

DRAWING No. 4 3 1	APPROVED BY EMILY	UNLESS OTHERWISE SPECIFIED TOLERANCES ARE X. ±0.50 .X ±0.30 .XX ±0.20 ANG. ±1°
11397	CHECKED BY HZF	
	DRAWING BY HAO	
SCALE NONE	REV. A4	UNIT mm

NO.	REV.	REVISIONS	CHK	DATE
4	A4	Modify Data	HZF	06/18/2020
3	A3	Modify Data	HZF	05/12/2015
2	A2	Modify Data	HZF	09/10/2013
1	A1	Modify Data	HZF	01/06/2012
0	A0	NEW RELEASE	HZF	05/23/2009