File No.	323	SHEET 1/ 1

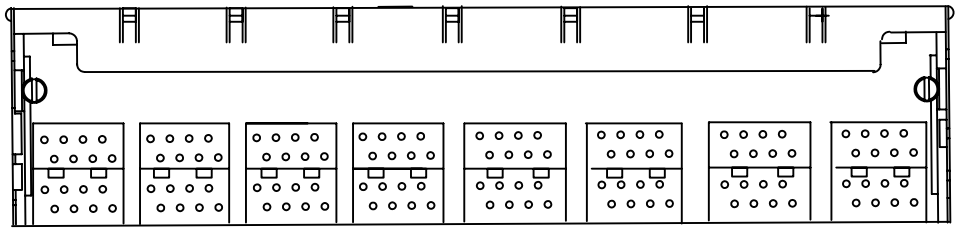

SPECIFICATIONS:

HOUSING:STANDARD MATERIAL GLASS FILLED POLYESTER UL (94V-0).

COLOUR:BLACK.

CONTACT:0.45mm DIA PHOSPHOR BRONZE. GOLD PLANTING OVER NICKEL.

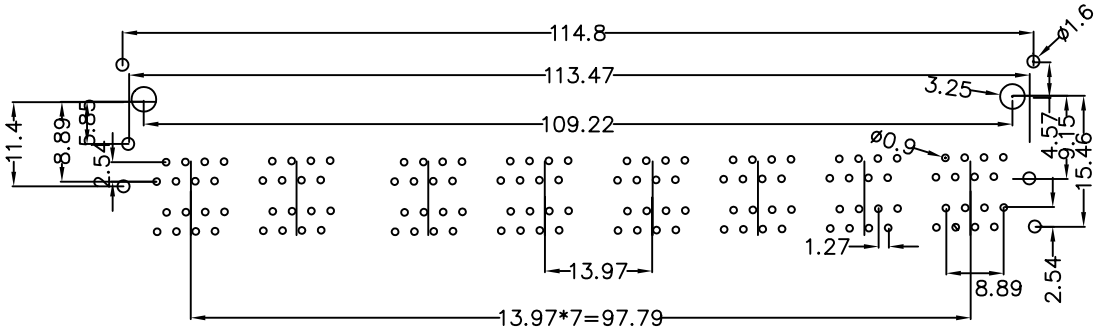

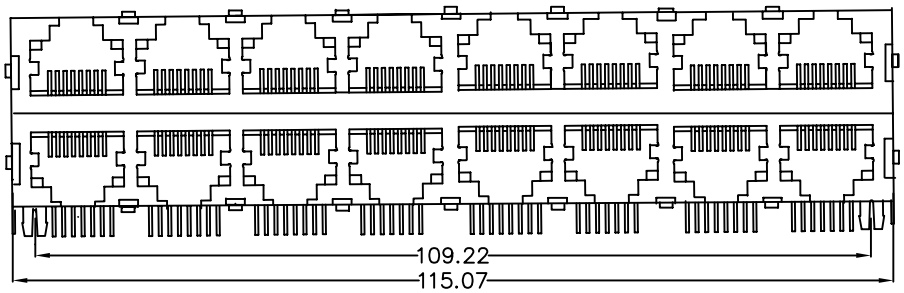

PCB LAYOUT

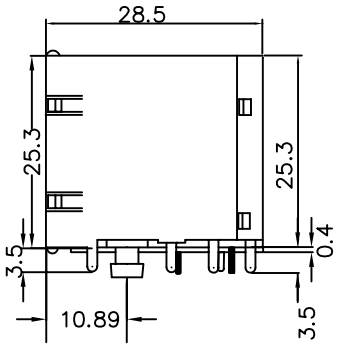

4UCON 元化興業股份有限公司
4UCON TECHNOLOGY INC.

DRAWING No.	APPROVED BY MEI	UNLESS OTHERWISE SPECIFIED TOLERANCES ARE
12933	CHECKED BY BECKY	.X .XX ±0.25 ANG.
	DRAWING BY HZF	
SCALE NONE	REV. A0	UNIT mm

NO.	REV.	REVISIONS	CHK	DATE
0	A0	NEW RELEASE	MEI	