File No.	697QG27803	SHEET	1/1

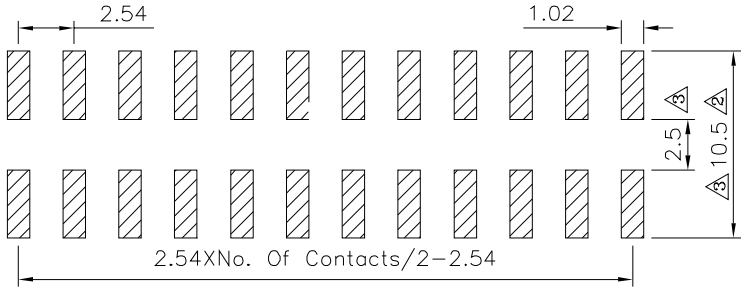

1 Recommended P.C.B. Layout
PCB Tolerance:±0.05 (Top View)

SPECIFICATION

Current Rating:3A
1 Withstand Voltage:1000V AC Min./Minute
Contact Resistance:20 Milliohms Max.
Insulation Resistance:1000 Megaohms Min.
Operation Temperature:−40°C~+105°C
2 Insulator:PA9T(UL94V−0),Black
Contact:Brass,Gold Flash Over Nickel
RoHS Compliant

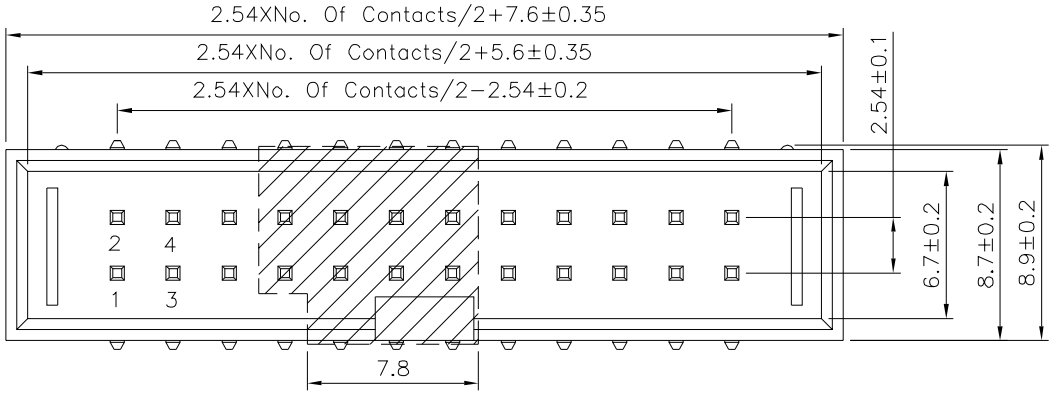

1 2 3

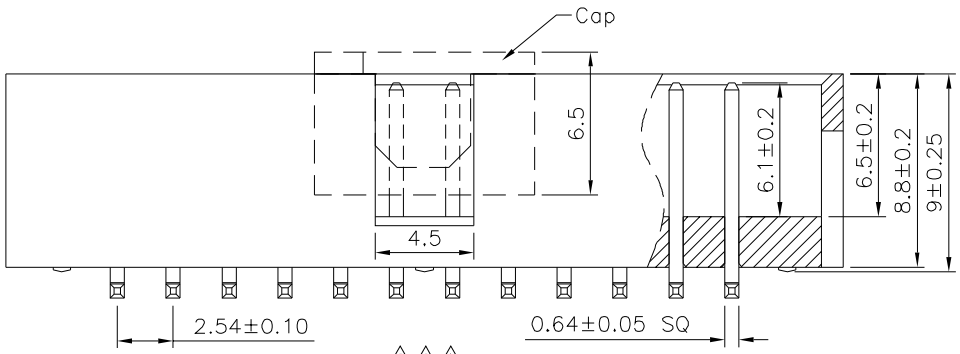

3 2 1

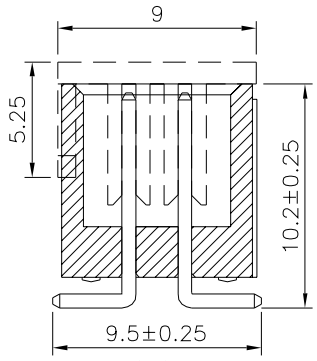

3 2

4UCON 元化興業股份有限公司
4UCON TECHNOLOGY INC.

DRAWING No.	APPROVED BY Jason Wu	UNLESS OTHERWISE SPECIFIED TOLERANCES ARE 3
20862	CHECKED BY Leo Han	X. ±0.30 X.° ±2° .X ±0.25 .X° ±1.5° .XX ±0.20 .XX° ±1.0° .XXX ±0.15 .XXX° ±0.5°
	DRAWING BY Michelle Lee	
SCALE NONE	REV. A3	UNIT mm

NO.	REV.	REVISIONS	CHK	DATE
3	A3	Modify Data	HZF	06/27/2026
2	A2	Modify Data	HZF	05/30/2023
1	A1	Modify Data	HZF	01/14/2019
0	A0	NEW RELEASE	HZF	11/27/2015