File No.	555GK29806	SHEET	1/1

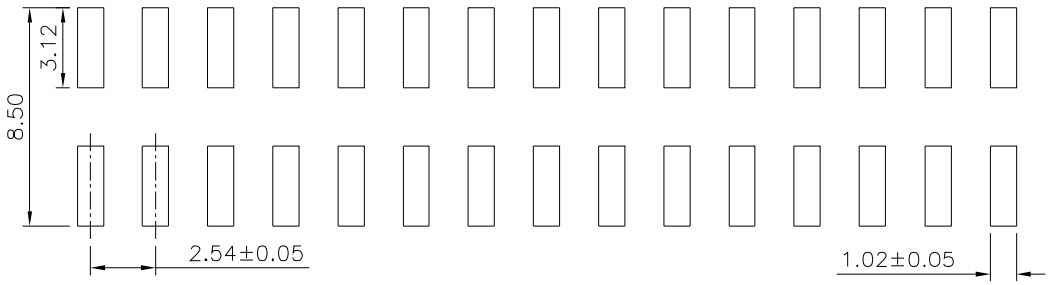

Recommended P.C.B. Layout

SPECIFICATION
Current Rating:3 Amp
Withstand Voltage:500V AC/Minute
Contact Resistance:20 Milliohms Max.
Insulation Resistance:1000 Megaohms Min.
Operation Temperature:−40°C~+105°C
Insulator:PA6T+30%G.F.(UL94V−0),Black
Contact:Brass,Gold Flash Over Nickel
RoHS Compliant

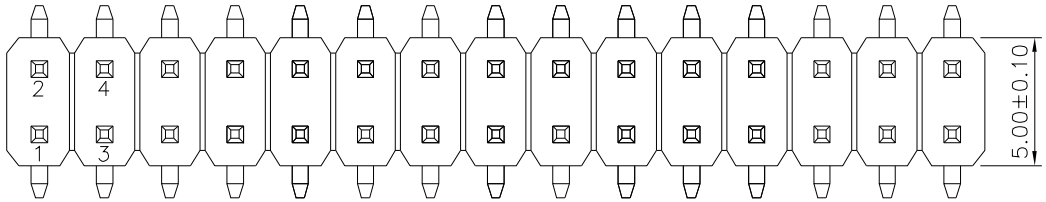

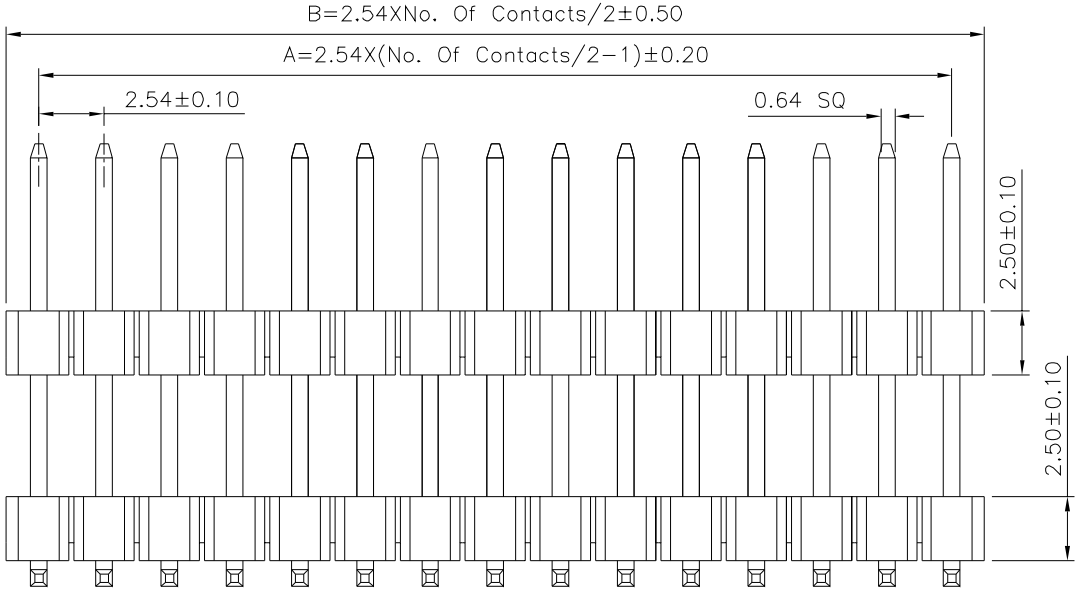

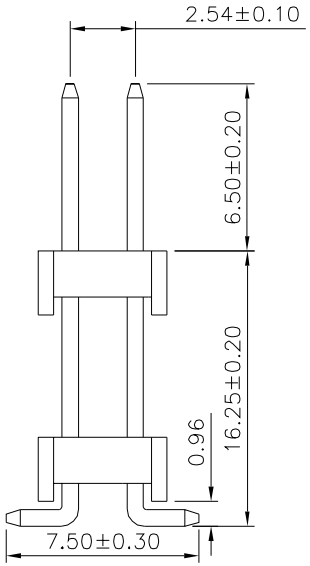

Pin	A	B	Pin	A	B
02		2.54	42	50.80	53.34
04	2.54	5.08	44	53.34	55.88
06	5.08	7.62	46	55.88	58.42
08	7.62	10.16	48	58.42	60.96
10	10.16	12.70	50	60.96	63.50
12	12.70	15.24	52	63.50	66.04
14	15.24	17.78	54	66.04	68.58
16	17.78	20.32	56	68.58	71.12
18	20.32	22.86	58	71.12	73.66
20	22.86	25.40	60	73.66	76.20
22	25.40	27.94	62	76.20	78.74
24	27.94	30.48	64	78.74	81.28
26	30.48	33.02	66	81.28	83.82
28	33.02	35.56	68	83.82	86.36
30	35.56	38.10	70	86.36	88.90
32	38.10	40.64	72	88.90	91.44
34	40.64	43.18	74	91.44	93.98
36	43.18	45.72	76	93.98	96.52
38	45.72	48.26	78	96.52	99.06
40	48.26	50.80	80	99.06	101.60

4UCON 元化興業股份有限公司
4UCON TECHNOLOGY INC.

DRAWING No.	APPROVED BY MEI	UNLESS OTHERWISE SPECIFIED TOLERANCES ARE
20972	CHECKED BY HZF	.X ±0.30
	DRAWING BY CYP	.XX ±0.20
		ANG.
SCALE NONE	REV. A0	UNIT mm

NO.	REV.	REVISIONS	CHK	DATE
0	A0	NEW RELEASE	HZF	05/29/2016