File No.	725NB23801	SHEET	1/1

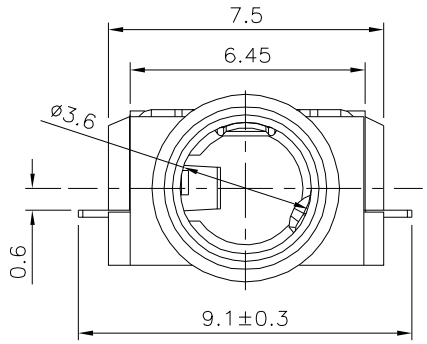

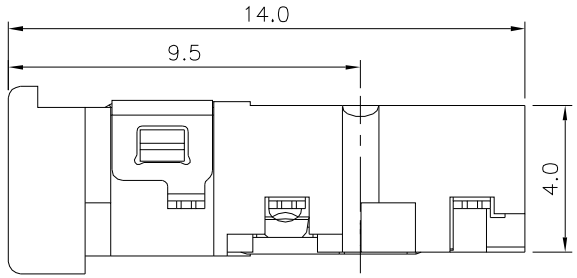

SPECIFICATION

Rating:DC 30V,1.0A
Contact Resistance:30 Milliohms Max.
Insulation Resistance:100 Megaohms Min.(250V DC)
Withstand Voltage:500V AC
RoHS Compliant

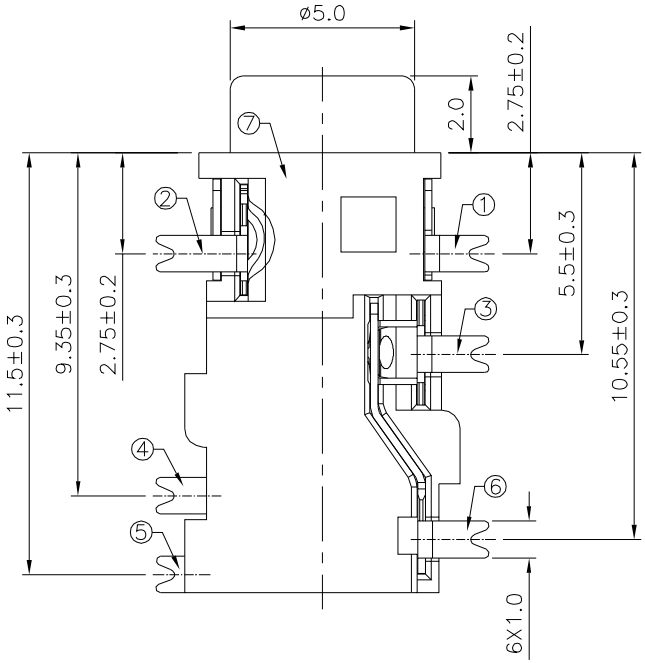

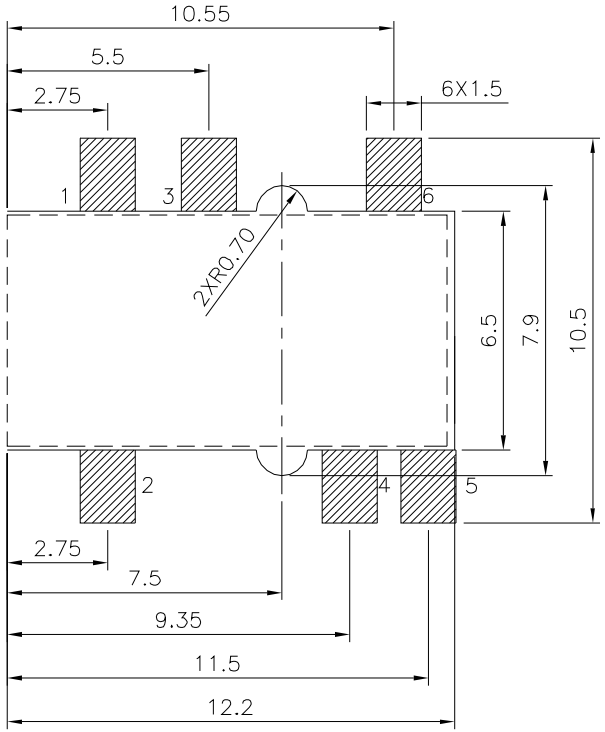

Recommended P.C.B. Layout(Top View)

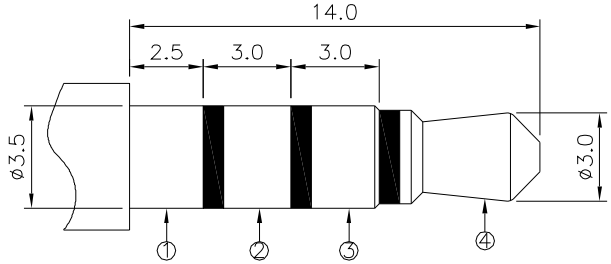

ø3.50mm 4 Pole Plug

Model No.	22471
Schematic	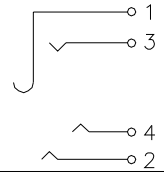

No.	Description	Q'ty	Material	Remark
①	Contact Foot #1	1	Bronze	Gold Plated Over Nickel
②	Contact Foot #2	1	Bronze	Gold Plated Over Nickel
③	Contact Foot #3	1	Bronze	Gold Plated Over Nickel
④	Contact Foot #4	1	Bronze	Gold Plated Over Nickel
⑤	Contact Foot #5	1	Bronze	Gold Plated Over Nickel
⑥	Contact Foot #6	1	Bronze	Gold Plated Over Nickel
⑦	Housing	1	PA9T	--

4UCON 元化興業股份有限公司 4UCON TECHNOLOGY INC.

DRAWING No.	APPROVED BY MEI	UNLESS OTHERWISE SPECIFIED TOLERANCES ARE
22471	CHECKED BY HZF	.X ±0.15
	DRAWING BY LZX	.XX ±0.15
		ANG. ±1.5°
SCALE NONE	REV. A0	UNIT mm

NO.	REV.	REVISIONS	CHK	DATE
0	A0	NEW RELEASE	HZF	08/23/2022