File No. 689 SHEET 1/1

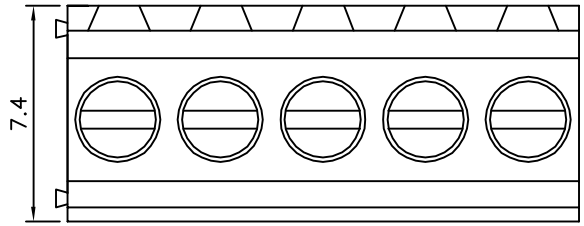


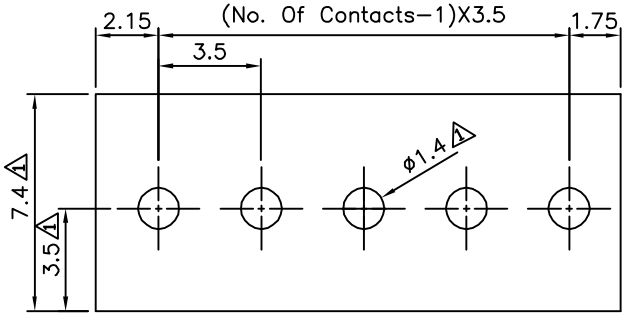


Recommended P.C.B. Layout

## SPECIFICATION

Voltage Rating:300V AC
Current Rating:10 Amp/Way Max.
Insulation Resistance:1000 Megaohms/1000V
Contact Resistance:20 Milliohms Max.
Withstanding Voltage:2000V AC For 1 Minute
Test Time=60Sec./1PCS
Wire Range:16~30AWG
Torque:2 kgf.cm/M2
Operation Temperature:−33°C~+105°C
Soldring Reliability:Test Temperature=250°C±10°C
5Seconds Max.
Contact(Metal Housing):Copper Alloy,Nickel Plated
Solder Pin:Copper Alloy,Tin Plated
Terminal Screw:Steel,Galvanized With Cr3+ Plated
Insulator Body(Housing):Polyamide+G.F.(UL94V−0),Green
RoHS Compliant

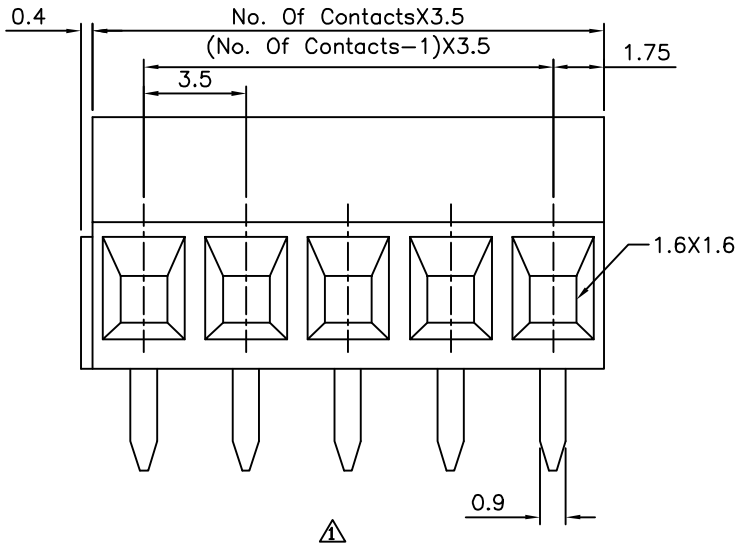


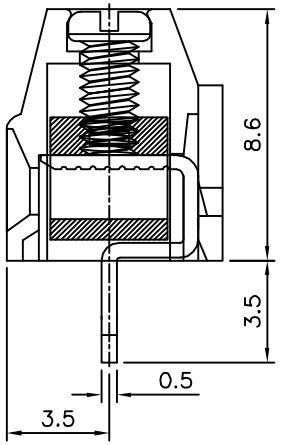


4UCON 元化興業股份有限公司 4UCON TECHNOLOGY INC.

| | | | |
|---|---|---|---|
| DRAWING No. 19702 | APPROVED BY MEI | UNLESS OTHERWISE SPECIFIED TOLERANCES ARE X. ±0.50 .X ±0.30 .XX ±0.20 X° ±1° | |
| | CHECKED BY HZF | | |
| | DRAWING BY WZL | | |
| SCALE NONE | REV. A1 | UNIT mm | |

| NO. | REV. | REVISIONS | CHK | DATE |
|---|---|---|---|---|
| 1 | A1 | Modify Data | HZF | 05/13/2010 |
| 0 | A0 | NEW RELEASE | HZF | 04/07/2009 |