File No.	697	SHEET	1/1

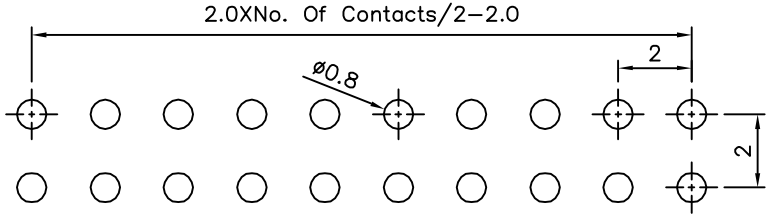

Recommended P.C.B. Layout

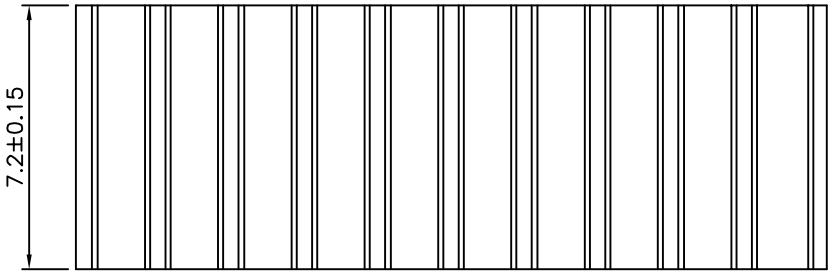

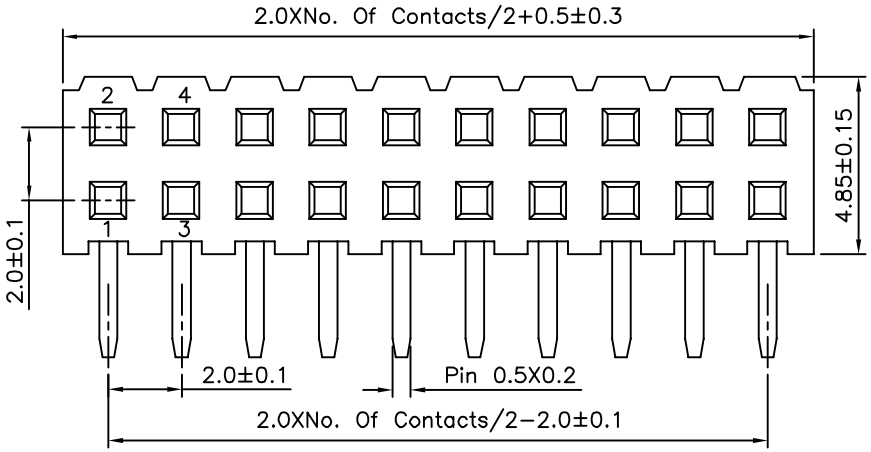

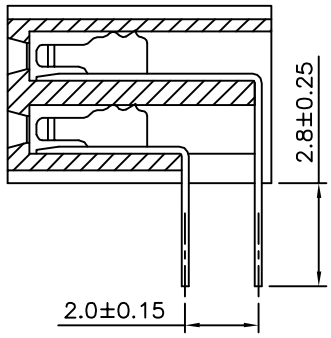

SPECIFICATION

Current Rating:1.5 Amp
Withstand Voltage:500V AC
Contact Resistance:20 Milliohms Max.
Insulation Resistance:1000 Megaohms Min.
Operation Temperature:−40°C~+105°C
Insulator:PA6T(UL94V−0),Black
Contact:Brass,Gold Plated Over Nickel
RoHS Compliant

4UCON 元化興業股份有限公司
4UCON TECHNOLOGY INC.

DRAWING No.	APPROVED BY	EMILY	UNLESS OTHERWISE SPECIFIED TOLERANCES ARE
00378	CHECKED BY	HZF	>80 ±1.20 25~80 ±0.15 5~25 ±0.10 <5 ±0.05 ANG. ±0.03°
	DRAWING BY	GAO	
SCALE NONE	REV.	A0	UNIT mm

NO.	REV.	REVISIONS	CHK	DATE
0	A0	NEW RELEASE	HZF	12/25/2012