File No.	561	SHEET	1/1

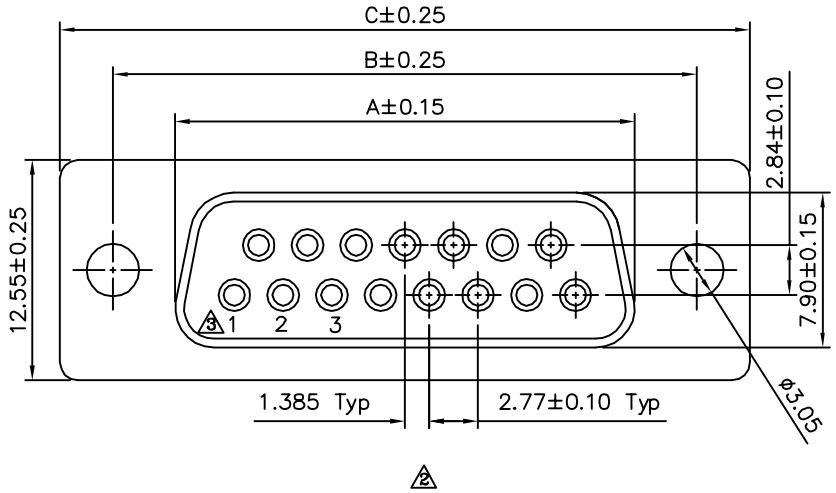

SPECIFICATION

Current Rating:5 Amps
Withstanding Voltage:1000V(One Minute)
Contact Resistance:20 Milliohms Max.
Insulation Resistance:1000 Megaohms Min.
At DC 500V
Operating Temperature:−50°C~+105°C
Insulator:PBT+30%G.F.,(UL94V−0),Black
Contact:Brass,Gold Flash On Contact Area
Tin Plated On Solder Tail,Under Plated Nickel
Shell:SPCC,Nickel Plated Front,Tin Plated Rear
RoHS Compliant

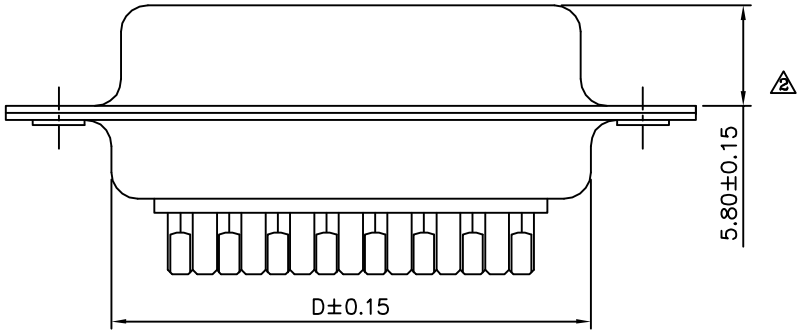

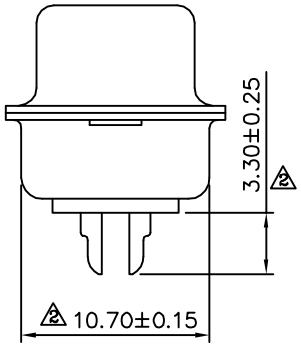

Pin	A	B	C	D
09	16.33	24.99	30.81	19.20
15	24.80	33.32	39.20	27.70
25	38.38	47.04	53.04	41.10
37	54.84	63.50	69.40	57.30

4UCON 元化興業股份有限公司 4UCON TECHNOLOGY INC.

DRAWING No.	APPROVED BY MEI	UNLESS OTHERWISE SPECIFIED TOLERANCES ARE
03339	CHECKED BY HZF	.X ±0.38 .X° ±3° .XX ±0.25 .XX° ±1° .XXX ±0.05 .XXX° ±0.5°
	DRAWING BY WSS	
SCALE NONE	REV. A3	UNIT mm

NO.	REV.	REVISIONS	CHK	DATE
3	A3	Modify Data	HZF	07/22/2011
2	A2	Modify Data	HZF	07/11/2011
1	A1	Modify Dim.	SHIN	02/15/2007
0	A0	NEW RELEASE	BECKY	02/06/2006