File No.	697JD10806	SHEET	1/1

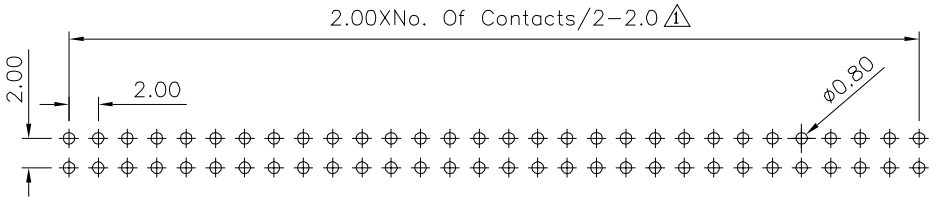

Recommended P.C.B. Layout(Top View)
(PCB Board Tolerance±0.05)

2 SPECIFICATION

Current Rating:1.5 Amps
Withstanding Voltage:500V Min. AC/Minute
Contact Resistance:20 Milliohms Max.
Insulation Resistance:1000 Megaohms Min.
Operation Temperature:−40°C~+105°C
Insulator:PA6T+30%G.F.(UL94V−0),Black
Contact:Brass,Gold Plated Over Nickel
RoHS Compliant

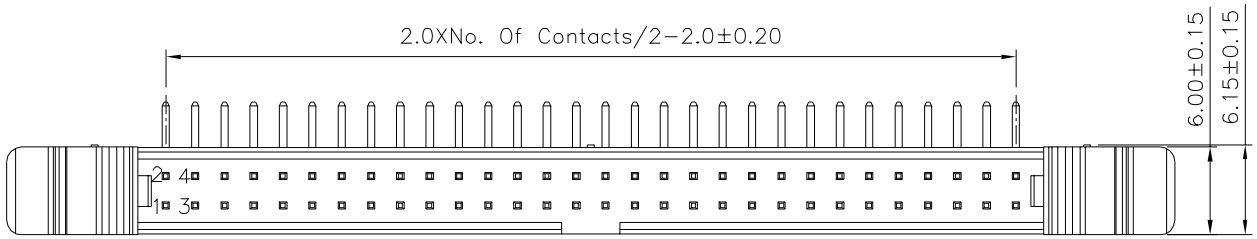

1

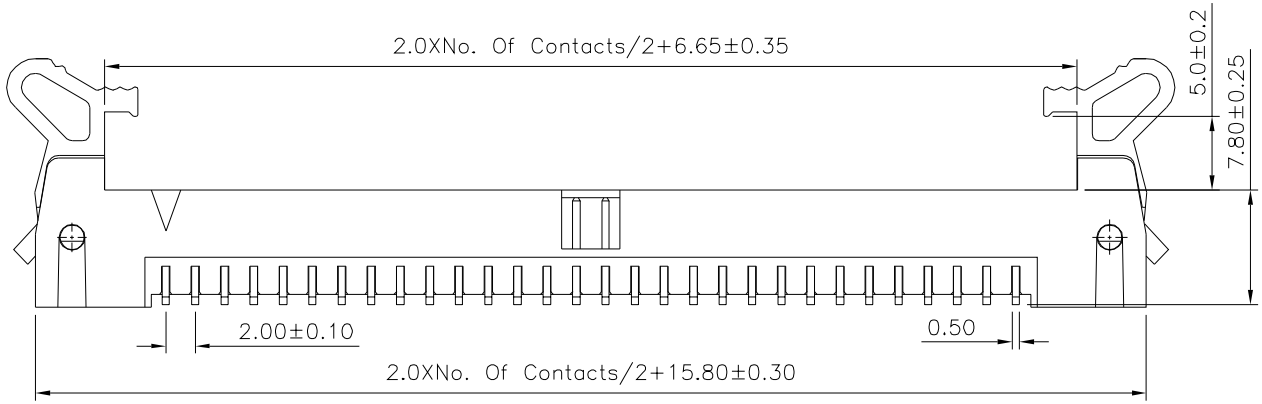

2 1

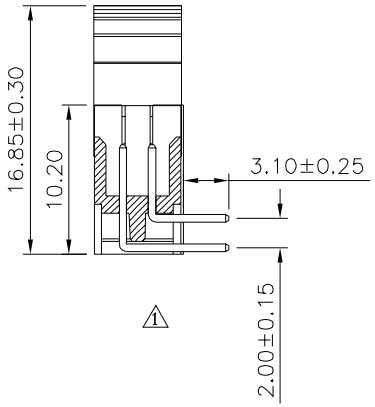

1

4UCON 元化興業股份有限公司 4UCON TECHNOLOGY INC.

DRAWING No.	APPROVED BY MEI	UNLESS OTHERWISE SPECIFIED TOLERANCES ARE
07159	CHECKED BY HZF	X. ±0.25 X.° ±2° .X ±0.20 .X° ±1.5° .XX ±0.15 .XX° ±1° .XXX ±0.10 .XXX° ±0.5°
	DRAWING BY CYP	
SCALE NONE	REV. A2	UNIT mm

NO.	REV.	REVISIONS	CHK	DATE
2	A2	Modify Data	HZF	04/10/2019
1	A1	Modify Data	HZF	05/14/2016
0	A0	NEW RELEASE	HZF	06/02/2013