File No.	227	SHEET 1 / 1

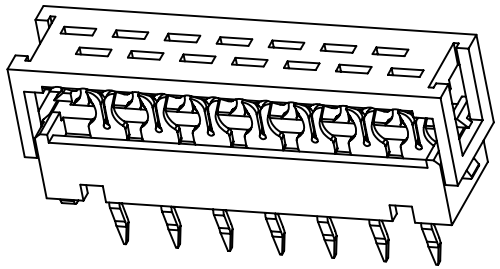

SPECIFICATIONS

Current Rating:1.0A AC,DC
Voltage Rating:30V AC,DC
Contact Resistance:20 Milliohms Max.
Insulation Resistance:1000 Megohms Min.
Withstanding Voltage:AC 500V AC/Minute
Operating Temperature:−40°C ~ +105°C
Insulator:High Temp. Plastic UL94V−0
Contact:Phosphor Bronze
Finish:Tin Plated

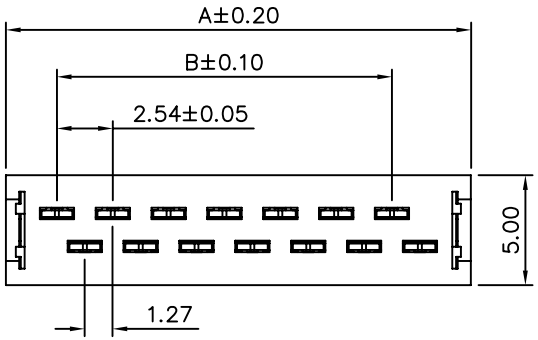

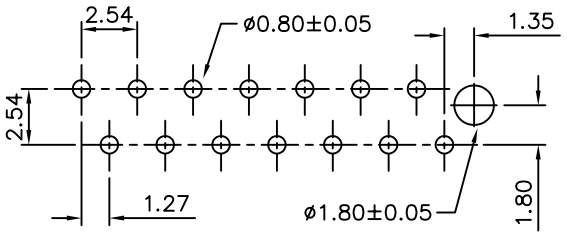

PCB Layout

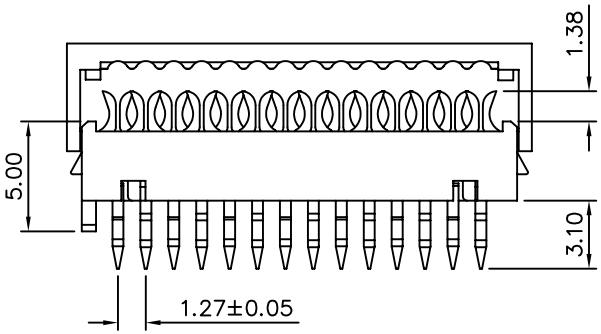

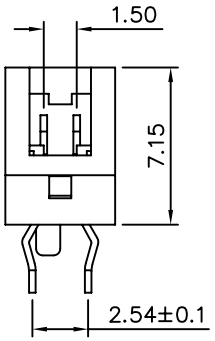

Circuit	Dim. A	Dim. B
04	8.45	2.54
06	10.99	5.08
08	13.53	7.62
10	16.07	10.16
12	18.61	12.70
14	21.15	15.24
16	23.69	17.78
18	26.23	20.32
20	28.77	22.86

4UCON 元化興業股份有限公司
4UCON TECHNOLOGY INC.

DRAWING No.	APPROVED BY MEI	UNLESS OTHERWISE SPECIFIED TOLERANCES ARE
09234	CHECKED BY BECKY	.X ±0.2
	DRAWING BY HZF	.XX ±0.15
SCALE NONE	REV. A0	ANG.
		UNIT mm

NO.	REV.	REVISIONS	CHK	DATE
0	A0	NEW RELEASE	BECKY	02/15/2005