File No.	400	SHEET	1/1

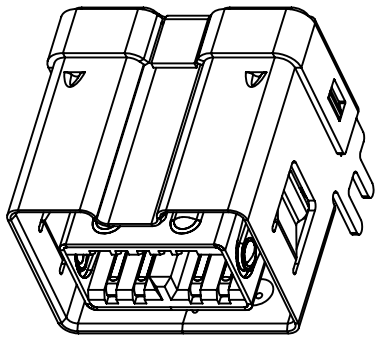

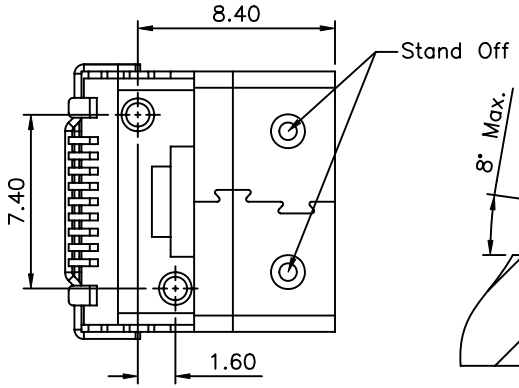

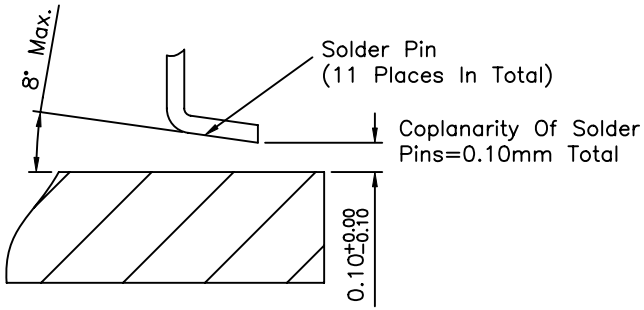

View Of Coplanarity

1 SPECIFICATION
Current:1.5 Amp
Voltage:30V
Contact Resistance:50 Milliohms Max.
Shell Resistance:50 Milliohms
Insulation Resistance:100 Megaohms Min.
Dielectric Withstand:100V DC
Operation Temperature:−40°C~+85°C
Storage Temperature:−40°C~+105°C
The Clearance Between The Contact And PCB
No More Than 0.10mm
Housing:LCP(UL94V−0)
Contact:Copper Alloy
Gold Plated 30u" On Contact Area,Tin
Plated On Solder Tail,Under Nickel
Shell:Brass,Nickel Plated
RoHS Compliant

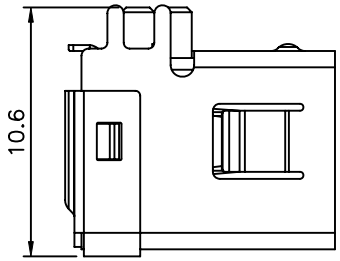

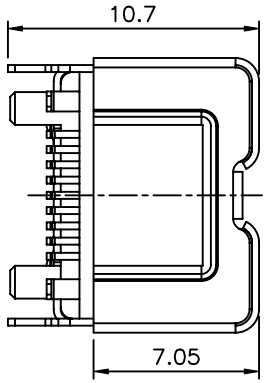

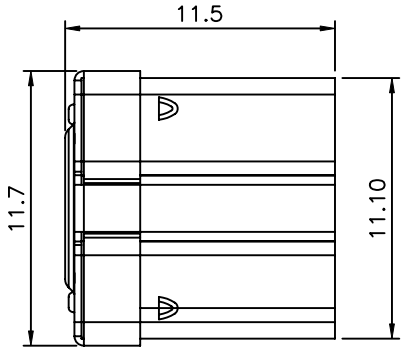

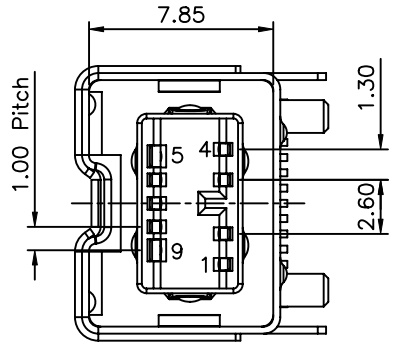

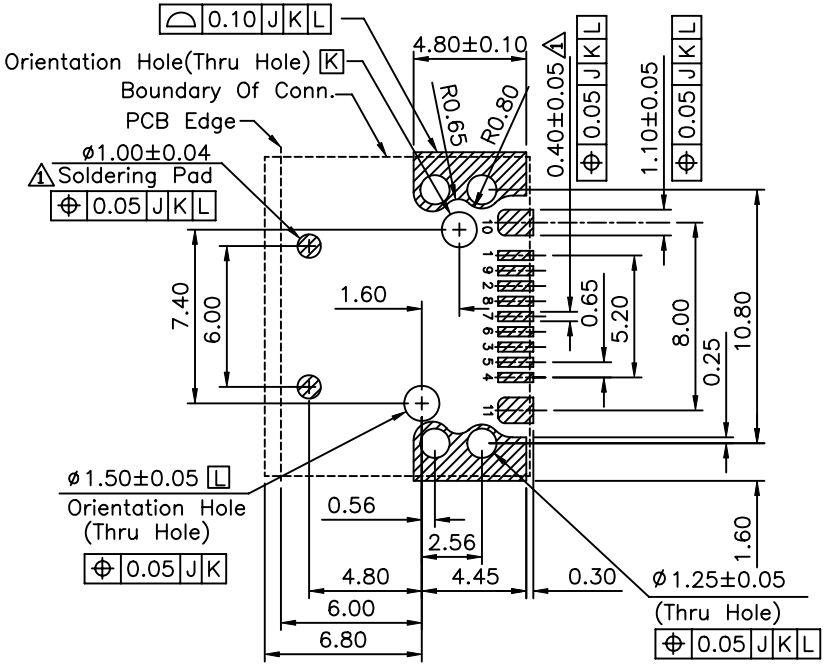

Recommended P.C.B. Layout

4UCON 元化興業股份有限公司
4UCON TECHNOLOGY INC.

DRAWING No.	APPROVED BY	UNLESS OTHERWISE SPECIFIED TOLERANCES ARE
10025	MEI	.X ±0.30 .X° ±1.0°
	CHECKED BY HZF	.XX ±0.20 .XX° ±0.5°
	DRAWING BY QQJ	.XXX ±0.10 .XXX° ±0.2°
SCALE NONE	REV. B1	UNIT mm

NO.	REV.	REVISIONS	CHK	DATE
1	B1	Modify Data	HZF	07/31/2010
0	B0	NEW RELEASE	HZF	09/25/2008