File No.	724MJ243806	SHEET	1/1

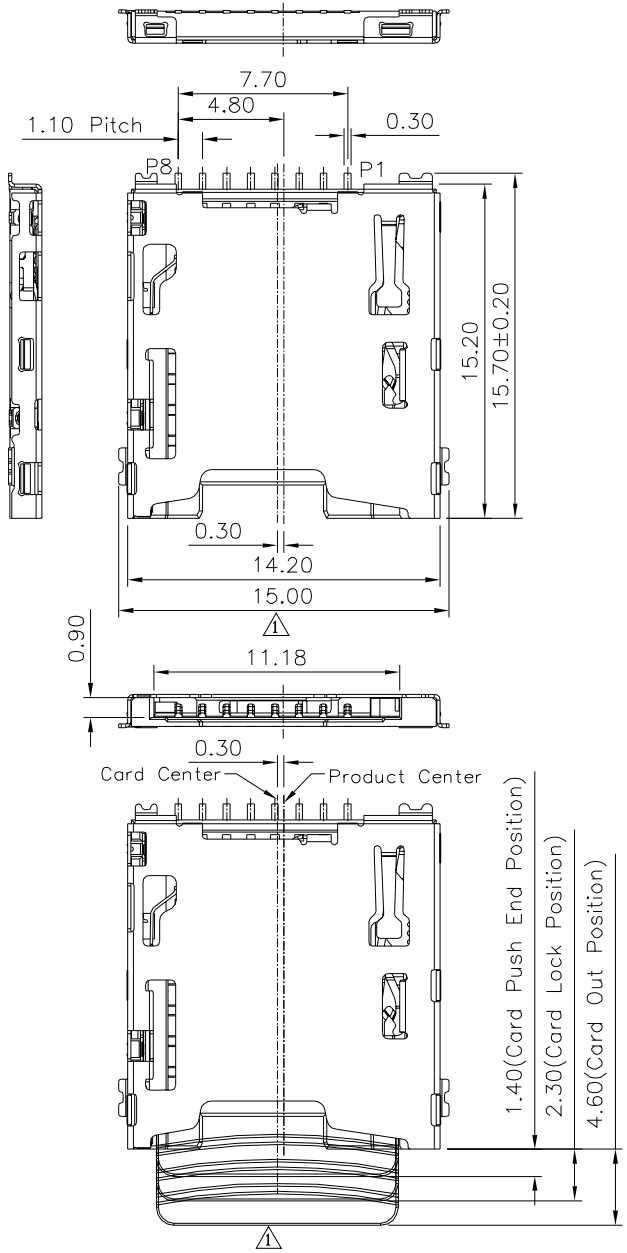

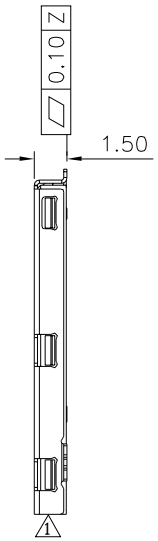

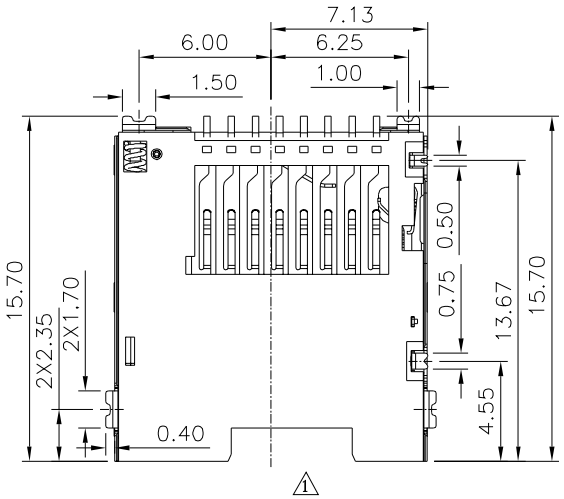

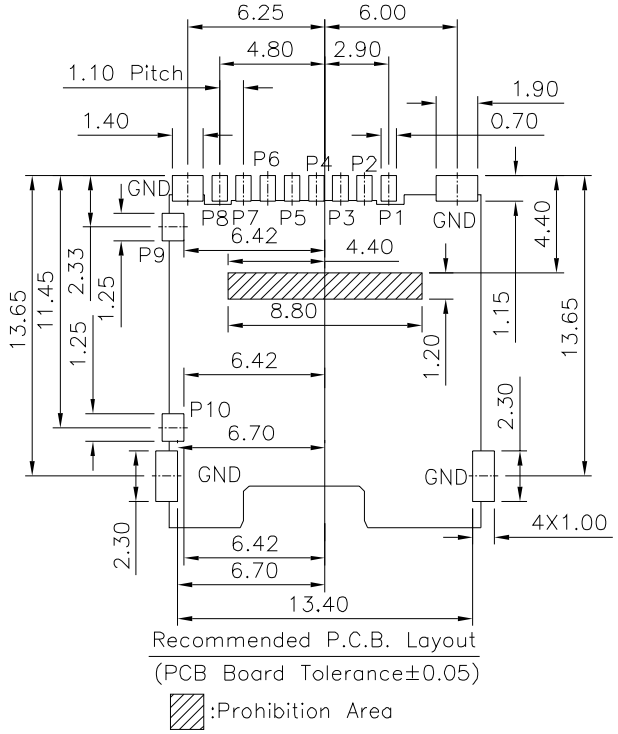

Recommended P.C.B. Layout
(PCB Board Tolerance±0.05)
:Prohibition Area

SPECIFICATION

1.Material&Finish

Insulator:LCP(UL94V-0),Black
Contact:Phosphor Bronze,Gold Flash On Contact Area,Tin Plated On Solder Tails,Over Nickel
Shell:Stainless Steel,Gold Flash On Solder Area, Nickel Plated Over All

2.Electrical Characteristics

Operating Voltage:100V AC(RMS)/DC
Current Rating:0.5A
Withstand Voltage:500V AC For 1 Minute
Contact Resistance:100 Milliohms Max.
Insulation Resistance:1000 Megaohms Min. At 250V DC

3.Environmental Characteristics

Operation Temperature:-25°C~+85°C

4.RoHS Compliant

Circuit Diagram For Card Detect Switch

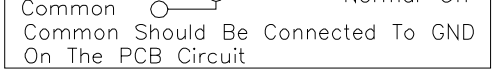

Common Should Be Connected To GND On The PCB Circuit

Pin No.	Description
Pin 1	DAT2:Data Line
Pin 2	CD/DAT3:Card Detect/Data Line
Pin 3	CMD:Command/Response
Pin 4	VDD:Supply Voltage
Pin 5	CLK:Clock
Pin 6	VSS:Supply Voltage Ground
Pin 7	DAT0:Data Line
Pin 8	DAT1:Data Line
Pin 9	DETECT SW(GND)
Pin 10	DETECT SW(CD)
GND	Cover GND

4UCON 元化興業股份有限公司 4UCON TECHNOLOGY INC.

DRAWING No.	APPROVED BY MEI	UNLESS OTHERWISE SPECIFIED TOLERANCES ARE
11096	CHECKED BY HZF	X. ±0.50 X.° ±5° .X ±0.25 .X° ±2° .XX ±0.15 .XX° ±1°
	DRAWING BY CYP	
SCALE NONE	REV. A2	UNIT mm

NO.	REV.	REVISIONS	CHK	DATE
2	A2	Modify Data	HZF	10/24/2022
1	A1	Modify Data	HZF	08/03/2018
0	A0	NEW RELEASE	HZF	02/19/2015