File No.	271FC03226	SHEET	1/1

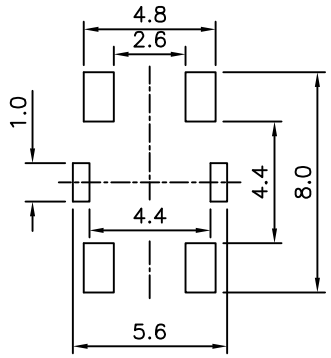

Recommended P.C.B. Layout

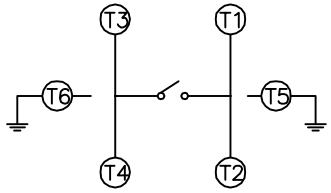

With Ground Circuit Diagram

SPECIFICATION

Current Range:50mA 12V DC
Withstand Voltage:250V AC(50Hz Or 60Hz) For 1 Minute
Contact Resistance:100 Milliohms Max.
Insulation Resistance:100 Megaohms Min. At 500V DC,60s±5s
Operating Temperature:−25°C~+70°C
Storage Temperature:−30°C~+80°C
Operating Force:160g
RoHS Compliant

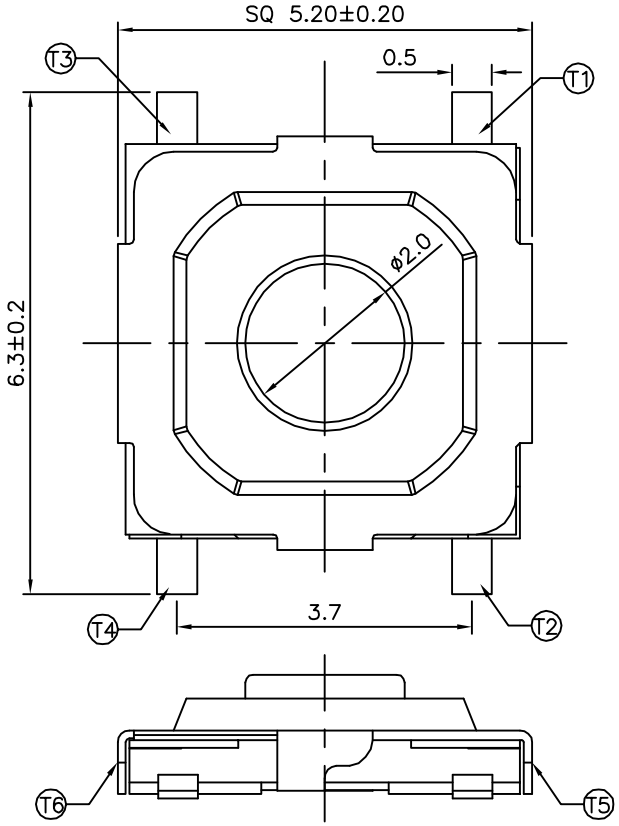

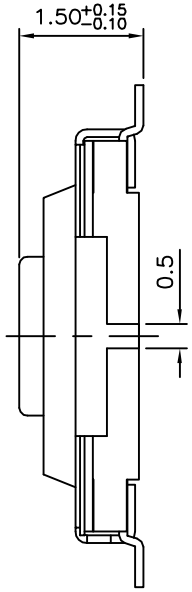

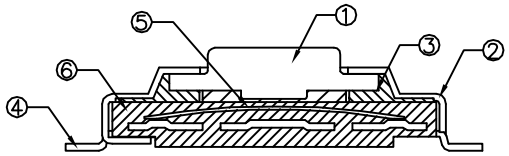

Item	Name	Q'ty	Material	Remark
①	Stem	1	SPCF	Nickel Plated
②	Cover	1	Nickel Silver	None
③	Adhesive Tape	1	Teflon	None
④	Terminal	1	Phosphor Bronze	Silver Plated Over Nickel
⑤	Contact	1	Stainless Steel	Silver Plated Over Nickel
⑥	Base	1	LCP	Black

4UCON 元化興業股份有限公司 4UCON TECHNOLOGY INC.

DRAWING No.	APPROVED BY EMILY	UNLESS OTHERWISE SPECIFIED TOLERANCES ARE
20706	CHECKED BY HZF	.X ±0.2
	DRAWING BY HAO	.XX ±0.2
SCALE NONE	REV. A0	UNIT mm

NO.	REV.	REVISIONS	CHK	DATE
0	A0	NEW RELEASE	HZF	09/03/2014