File No.	439NL04801	SHEET	1/1 △1

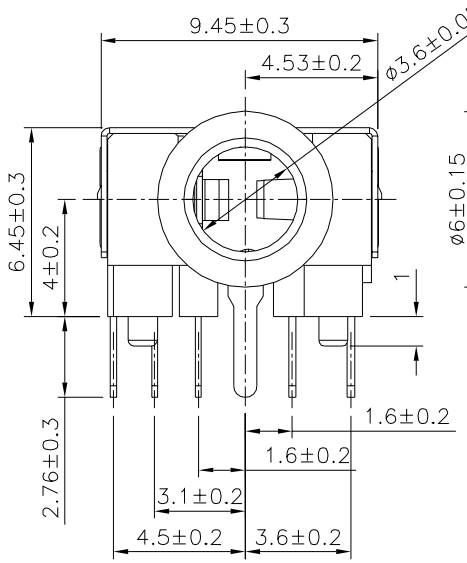

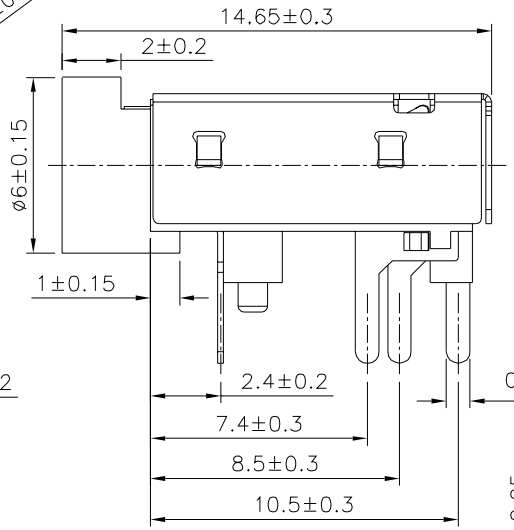

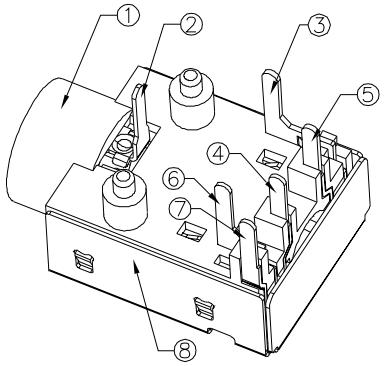

△1 SPECIFICATION

Rating:DC 30V,0.5A

Contact Resistance:30 Milliohms Max.
After Test:50 Milliohms Max.

Insulation Resistance:100 Megaohms Min.(500V DC)
After Test:50 Megaohms Min.

Withstand Voltage:500V AC

Operation Temperature Range:−20°C~+70°C

RoHS Compliant

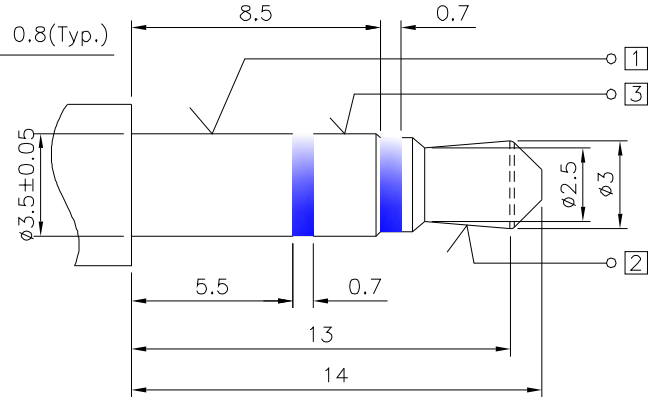

Matching Plug

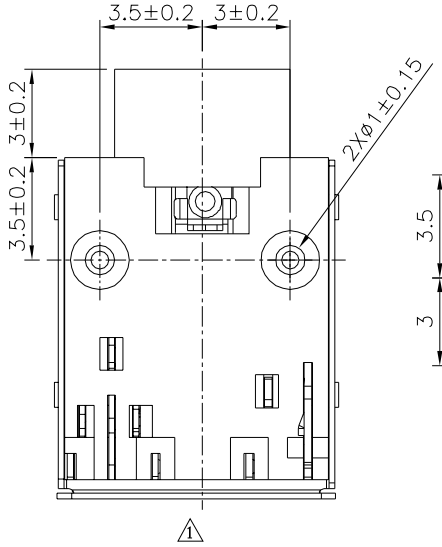

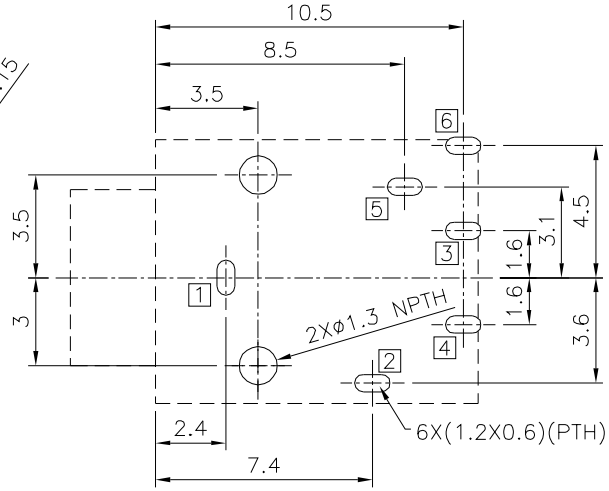

Recommended P.C.B. Layout(Top View)

P/N	07PIN	06PIN	05PIN	04PIN(TYPE 2)	04PIN(TYPE 1)
Schematic	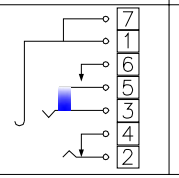	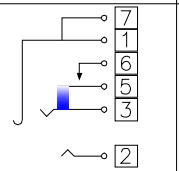	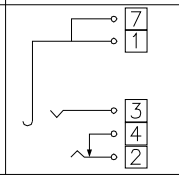	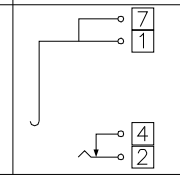	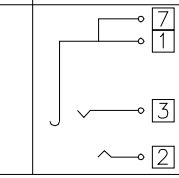

No.	Description		Q'ty	Material	Remark
⑧	Shell	7	1	Phosphor Bronze	Nickel Plated
⑦	Make Terminal	6	1	Phosphor Bronze	Silver Plated
⑥	Transfer Terminal	5	1	Phosphor Bronze	Silver Plated
⑤	Shunt Terminal	4	1	Brass	Silver Plated
④	Ring Spring	3	1	Phosphor Bronze	Silver Plated
③	Tip Spring	2	1	Phosphor Bronze	Silver Plated
②	Earth Spring	1	1	Phosphor Bronze	Silver Plated
△1 ①	Housing		1	PA10T,UL94V−0	Black

4UCON 元化興業股份有限公司 4UCON TECHNOLOGY INC.

DRAWING No.	APPROVED BY MEI	UNLESS OTHERWISE SPECIFIED TOLERANCES ARE X. ±0.3 .X ±0.3 .XX ±0.3 ANG. ±2°
20907	CHECKED BY HZF	
	DRAWING BY SONG	
SCALE NONE	REV. A1	UNIT mm

NO.	REV.	REVISIONS	CHK	DATE
△1	A1	Modify Data	HZF	12/04/2023
△0	A0	NEW RELEASE	HZF	08/27/2012