File No.	697IL03806	SHEET	1/1

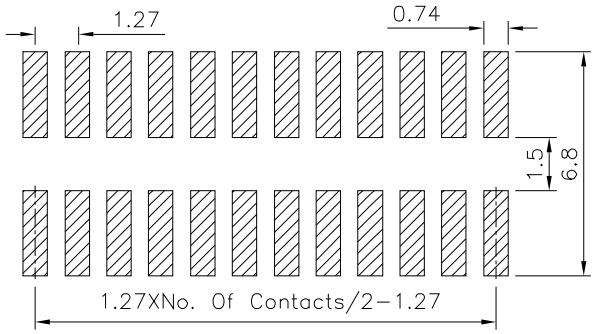

Recommended P.C.B. Layout(Top View)

(PCB Board Tolerance±0.05)

SPECIFICATION

Current Rating:1.0 Amp
Withstanding Voltage:500V AC/DC
Contact Resistance:20 Milliohms Max.
Insulation Resistance:1000 Megaohms Min.
Operation Temperature:−40°C~+105°C
Contact:Brass,Gold Flash Over Nickel
Insulator:PA6T(UL94V−0),Black
RoHS Compliant

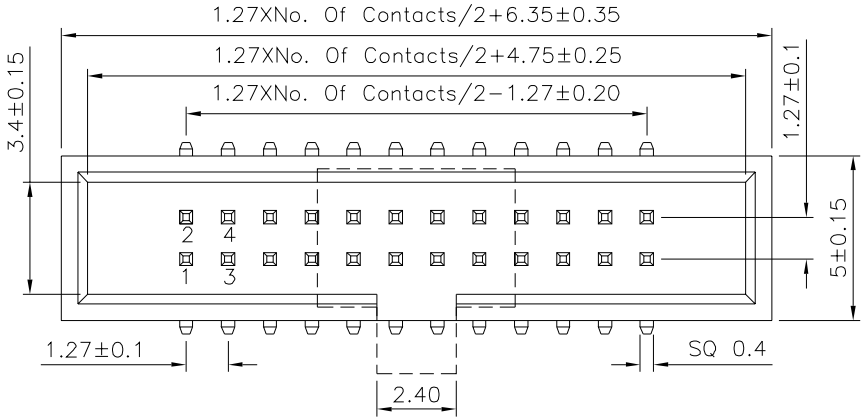

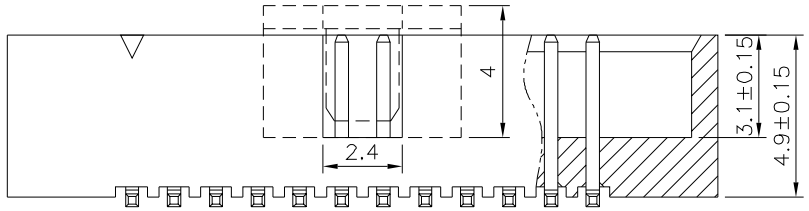

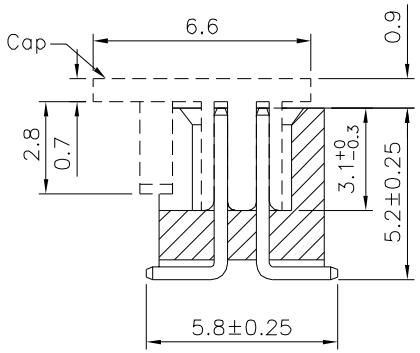

4UCON 元化興業股份有限公司 4UCON TECHNOLOGY INC.

DRAWING No.	APPROVED BY	MEI	UNLESS OTHERWISE SPECIFIED TOLERANCES ARE
21504	CHECKED BY	HZF	X. ±0.25 X.° ±2° .X ±0.20 .X° ±1.5° .XX ±0.15 .XX° ±1° .XXX ±0.10 .XXX° ±0.5°
	DRAWING BY	CYP	
SCALE NONE	REV.	A0	UNIT mm

NO.	REV.	REVISIONS	CHK	DATE
0	A0	NEW RELEASE	HZF	06/03/2018