File No.	725MB08233	SHEET	1/1

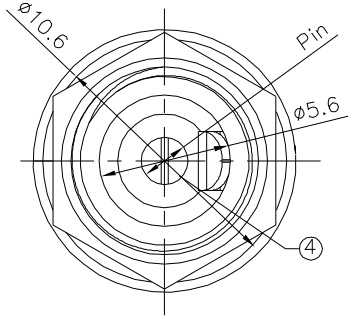

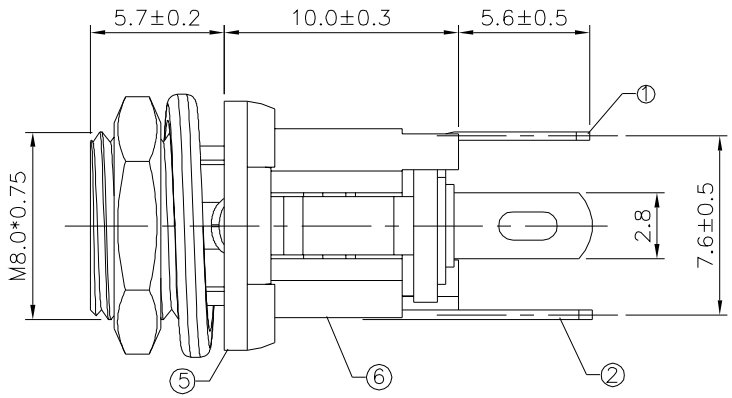

SPECIFICATION

Rating:DC 30V 3.0A
Withstanding Voltage:500V AC
Contact Resistance:30 Milliohms Max.
Insulation Resistance:100 Megaohms Min.(DC 250V)
RoHS Compliant

Pin Diameter	Item No.
Pinø2.0	22249
Pinø2.5	22253

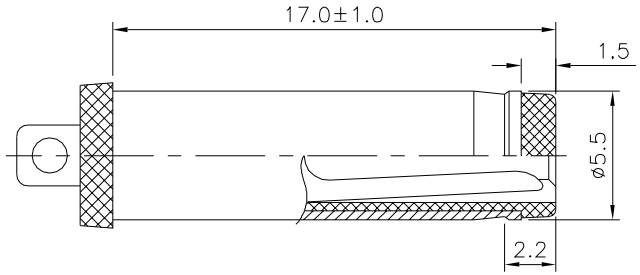

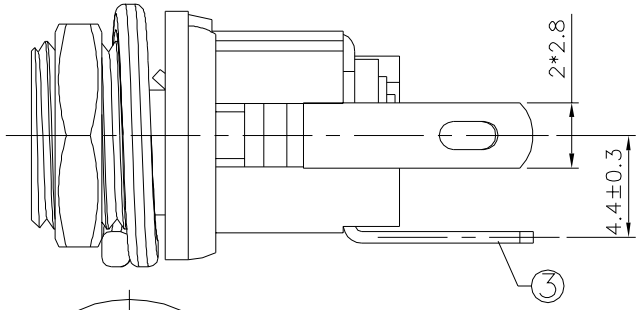

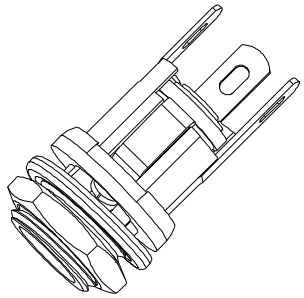

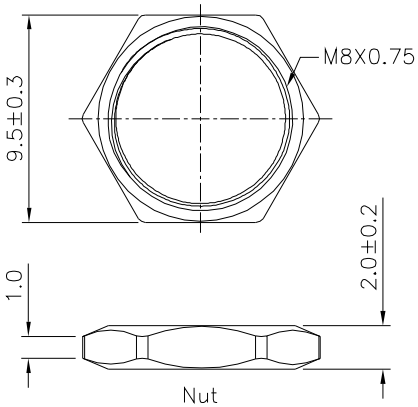

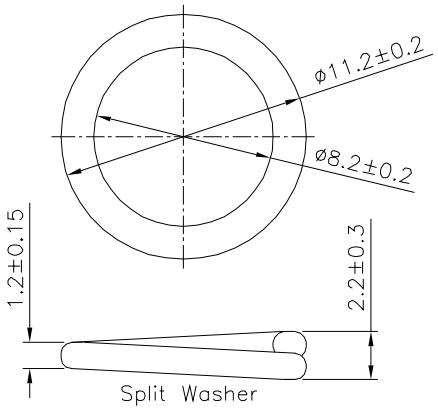

Schematic

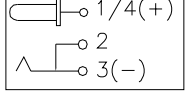

No.	Description	Q'ty	Material	Remark
①	1# Curve Piece	1	Brass	Tin Plated
②	2# Curve Piece	1	Brass	Tin Plated
③	Spring	1	Bronze	Tin Plated
④	Pin	1	Brass	Nickel Plated
⑤	Axis Support	1	Brass	Nickel Plated
⑥	Housing	1	PBT	
⑦	Nut	1	Brass	Nickel Plated
⑧	Split Washer	1	Steel	Nickel Plated

4UCON 元化興業股份有限公司
4UCON TECHNOLOGY INC.

DRAWING No.	APPROVED BY MEI	UNLESS OTHERWISE SPECIFIED TOLERANCES ARE
22253	CHECKED BY HZF	.X ±0.15
	DRAWING BY HAO	ANG. ±1.5°
SCALE NONE	REV. A3B	UNIT mm

NO.	REV.	REVISIONS	CHK	DATE
1	A3B	Modify Data	HZF	02/08/2022
0	A3A	NEW RELEASE	HZF	01/12/2022