File No.	432	SHEET	1/1

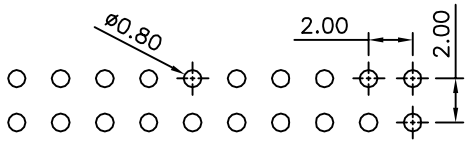

1 Recommended P.C.B. Layout(Top Side)
(PCB Board Tolerance±0.05)

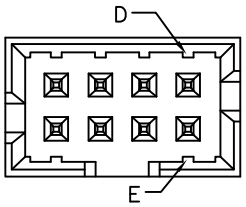

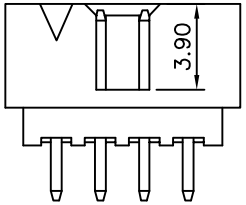

2 6,8,10 Pin
(6 Pin Without Identirication"D","E")

2 1 SPECIFICATION

Current Rating:2.0 Amp
Withstand Voltage:500V AC/DC
Contact Resistance:20 Milliohms Max.
Insulation Resistance:1000 Megaohms Min.
Operation Temperature:−40°C~+105°C
Contact:Brass,Gold Flash Over All,Over Nickel
Insulator:PA9T+30%G.F.(UL94V−0),Black
RoHS Compliant

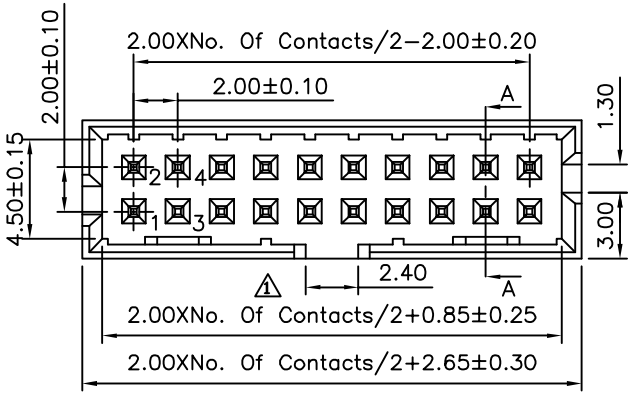

14,16,20,24,26,30,34,40,44,50,60 Pin 2

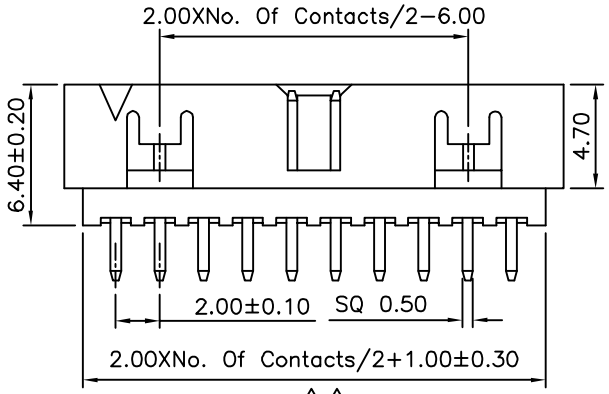

2 1

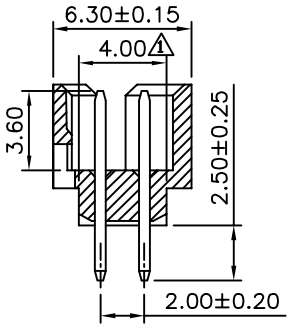

Section A−A

4UCON 元化興業股份有限公司 4UCON TECHNOLOGY INC.

DRAWING No.	APPROVED BY	EMILY	UNLESS OTHERWISE SPECIFIED TOLERANCES ARE
11255	CHECKED BY	HZF	1 .X ±0.40 .XX ±0.25 .XXX ±0.15 ANG. ±3°
	DRAWING BY	GAO	
SCALE NONE	REV.	A2	UNIT mm

NO.	REV.	REVISIONS	CHK	DATE
2	A2	Modify Data	HZF	11/21/2012
1	A1	Modify Data	HZF	07/30/2010
0	A0	NEW RELEASE	SHIN	05/23/2007